MT6218B GSM/GPRS Baseband Processor Data Sheet

Revision 1.00

September 26, 2003

Revision History

Revision	Date	Author	Comments
1.00	Sep. 26, 2003	Cliff	First Release

TABLE OF CONTENTS

Revision History 2

Preface 5

Acronym for Register Type 5

1. System Overview 6

1.1 Features 8
1.2 General Description 12

2 Product Description 14

2.1 Pin Outs 14
2.2 Pin Description 17
2.3 Power Description 26

3 Micro-Controller Unit Subsystem 34

3.1 Processor Core 35
3.2 Memory Management 35
3.3 Bus System 38
3.4 Direct Memory Access 41
3.5 Interrupt Controller 58
3.6 Internal Memory Controller 70
3.7 External Memory Interface 71

4 Microcontroller Peripherals 80

4.1 Pulse-Width Modulation Outputs 81
4.2 Alerter 83
4.3 SIM Interface 86
4.4 Keypad Scanner 95
4.5 General Purpose Inputs/Outputs 97
4.6 General Purpose Timer 108
4.7 UART 110
4.8 IrDA Framer 125
4.9 Real Time Clock 132
4.10 Auxiliary ADC Unit 138

5 Microcontroller Coprocessors 142

5.1 GPRS Cipher Unit 142
5.2 Divider 144
5.3 CSD Accelerator 146
5.4 FCS Codec 158

6 Multi-Media Subsystem 160

6.1 LCD Interface 160
6.2 JPEG Decoder 170
6.3 Image Resizer 182
6.4 NAND FLASH Interface 193
6.5 USB Device Controller 208
6.6 Memory Stick and SD Memory Card Controller 218

7 Audio Front-end 241

7.1 General Description 241
7.2 Register Definitions 242
7.3 Programming Guide 245

8 Radio Interface Control 246
8.1 Base-band Serial Interface 246
8.2 Base-band Parallel Interface 251
8.3 Automatic Power Control (APC) Unit 254
8.4 Automatic Frequency Control (AFC) Unit 260

9 Baseband Front End 264
9.1 Baseband Serial Ports 265
9.2 Downlink Path (RX Path) 267
9.3 Uplink Path (TX Path) 273

10 Timing Generator 276
10.1 TDMA timer 276
10.2 Slow Clocking Unit 283

11 Power, Clocks and Reset 287
11.1 Baseband to PMIC Serial Interface 287
11.2 Clocks 289
11.3 Reset Management 293
11.4 Software Power Down Control 296

12 Analog Front-end Interface 300
12.1 General Description 300
12.2 Register Definitions 300

Preface

Acronym for Register Type

R/W Capable of both read and write access

RO Read only

RC Read only. After reading the register bank, each bit which is HIGH(1) will be cleared to LOW(0) automatically.

WO Write only

W1S Write only. When writing data bits to register bank, each bit which is HIGH(1) will cause the corresponding bit to be set to 1. Data bits which are LOW(0) has no effect on the corresponding bit.

W1C Write only. When writing data bits to register bank, each bit which is HIGH(1) will cause the corresponding bit to be cleared to 0. Data bits which are LOW(0) has no effect on the corresponding bit.

1. System Overview

The MT6218B is a highly integrated single chip solution for GSM/GPRS phone. Based on 32-bit ARM7EJ-S™ RISC processor, MT6218B features not only high performance GPRS Class 12 MODEM but is also designed with support for the wireless multi-media applications, such as advanced display engine, hardware JPEG decoder, synthesis audio with 64-tone polyphony, digital audio playback, Java acceleration, MMS and etc. Additionally, MT6218B provides varieties of advanced interfaces for functionality extensions, like 8-port external memory interface, 3-port 8-bit parallel interface, NAND Flash, IrDA, USB and MMC/SD/MS/MS Pro. The typical application can be shown as **Figure** 1.

External Memory Interface

Providing the greatest capacity for expansion, the MT6218B supports up to 8 state-of-the-art devices with SRAM-like interface, including burst/page mode Flash, page mode SRAM, Pseudo SRAM, Color/Parallel LCD, and multi-media companion chip, like Camera and Melody chips. Regarding the consideration of power consumption and low noise, this interface is designed for flexible I/O voltage and allows for lowering supply voltage down to 1.8V. In addition, the driving strength is configurable that makes the signal integrity problem easy. Retention technology is also specifically used on data bus to prevent the bus from being floating during turn over.

Multi-media Subsystem

In order to provide more flexibility and bandwidth for multi-media products, an additional 8-bit parallel interface is incorporated. This interface is designed specially for support with Camera companion chip as well as LCD panel. Moreover, it can connect NAND flash device to provide a solution for multi-media data storage. For running multi-media application faster, MT6218B integrates also several hardware-based engines. With hardware based JPEG decoder, the MT6218B easily handles real-time playback of compressed image. With hardware based Resizer and advanced display engine, it can display and combine arbitrary size of images with up to 4 blending layers.

User Interface

For user interactions, the MT6218B brings together all necessary peripheral blocks for multi-media GSM/GPRS phone. It comprises the Keypad Scanner with capability of multiple key pressing, SIM Controller, Alerter, Real Time Clock, PWM, Serial LCD Controller and General Purpose Programmable I/Os. For connectivity and data storage, the MT6218B consists of UART, IrDA, USB 1.1 Slave and MMC/SD/MS/MS Pro. Besides, for large amount of data transfer, high performance DMA (Direct Memory Access) and hardware flow control are implemented, that greatly enhances the performance and helps to reserve more processing power.

Audio Interface

With highly integrated mixed-signal Audio Front-End, the MT6218B completes an architecture that allows for easy audio interfacing with direct connection to the audio transducers. Not only D/A and A/D Converters for Voice Band, but also the high resolution Stereo D/A Converters for Audio band are integrated. In addition, the MT6218B provides also Stereo Input and Analog Mixer. All of them enable the MT6218B based terminal a rich platform for multi-media applications.

Radio Interface

Providing a well-organized radio interface with flexibility for efficient customization, the MT6218B integrates mixed-signal Baseband Front-End. It carries out gain and offset calibration mechanisms and filters with programmable coefficients for comprehensive compatibility control on RF modules. The approach is also towards combining a high resolution D/A Converter for controlling VCXO or crystal instead of TCVCXO to reduce the overall system cost. On the other hand, with 14-bit high resolution A/D Converter for RF downlink path, MT6218B achieves great quality of MODEM performance. Besides, to remove the necessary of external current-driving component, the driving strength of some BPI outputs is designed to be configurable.

Debug Function

The JTAG interface enables in-circuit debugging of software program with the ARM7EJ-S core. With this standardized debugger interface, the MT6218B provides developers with a wide set of options for choosing ARM development kits from supports of thirty parties.

Power Management

The MT6218B offers various low-power features helping reduce system power consumption including Pause Mode of 32KHz clocking at Standby State, Power Down Mode for individual peripherals and Processor Sleep Mode. Fabricated in low-power CMOS process, together with the low-power features, the overall system can achieve ultra low power consumption.

Package

The MT6218B device is offered in a 13mm×13mm, 274-ball, 0.65 mm pitch, TFBGA package.

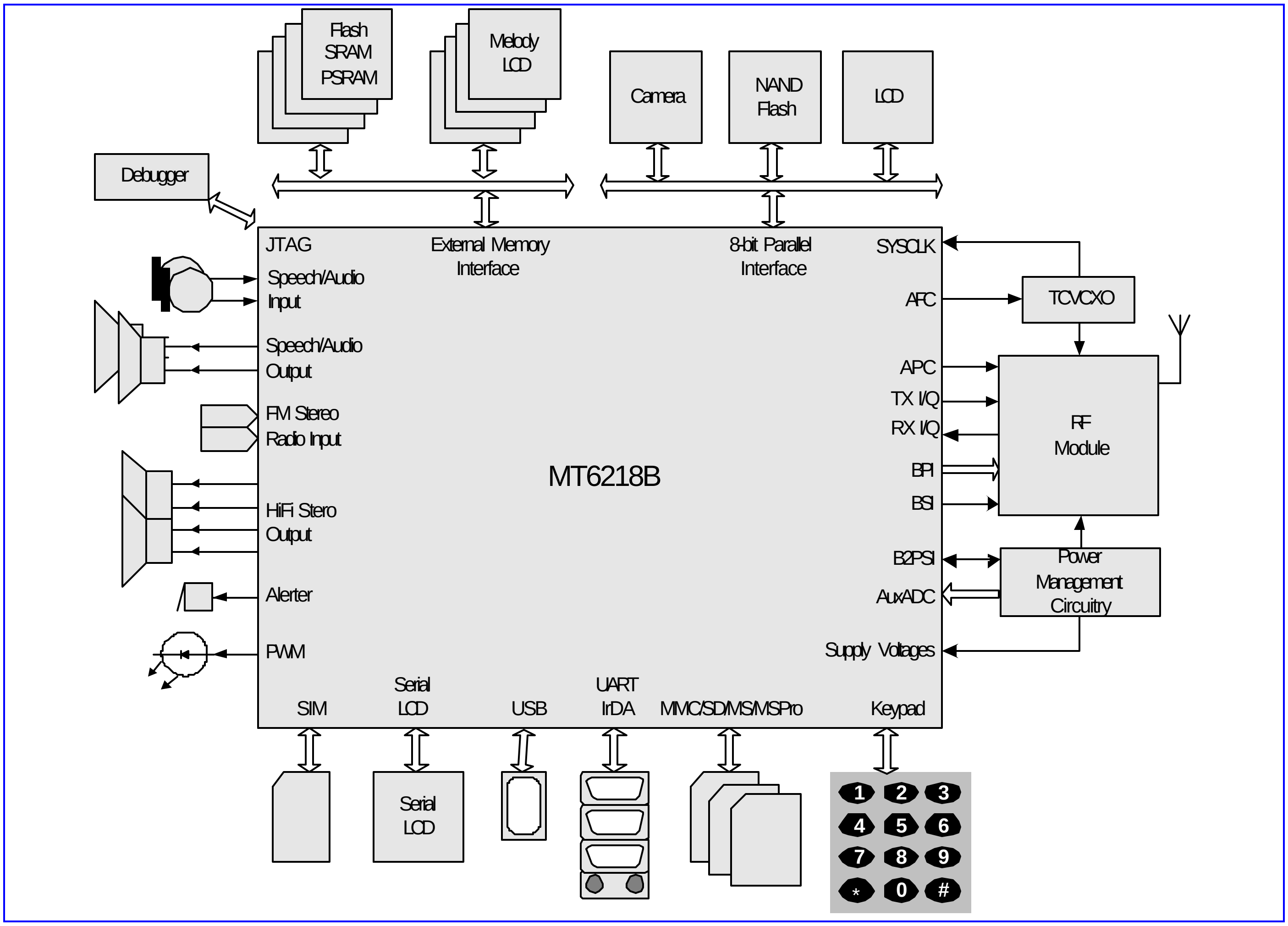

Figure 1 Typical application of MT6218B

1.1 Features

- **General**
  - Integrated voice-band, audio-band and base-band analog front ends
  - TFBGA 13mm×13mm, 274-ball, 0.65 mm pitch package
- **MCU Subsystem**
  - ARM7EJ-S 32-bit RISC processor
  - Java hardware acceleration for faster Java-based games and other applets
  - Operating frequency: 26/52 MHz
  - 13 DMA channels
  - 256K Bytes zero-wait-state on-chip SRAM
  - On-chip boot ROM for Factory Flash Programming
  - Watchdog timer for system crash recovery
  - 2 sets of General Purpose Timer
  - Circuit Switch Data and Division coprocessors
- **External Memory Interface**
  - Support up to 8 external devices
  - Support 8-bit or 16-bit memory components with size up to 64M Bytes each
  - Support Flash and SRAM with Page Mode or Burst Mode
  - Support Pseudo SRAM
  - Industrial standard Parallel LCD Interface
  - Built-in hardware acceleration function for color LCD panels
  - Support multi-media companion chips with 8/16 bits data width
  - Flexible I/O voltage of 1.8V ~ 3V for memory interface
  - Configurable driving strength for memory interface
- **Multi-media Subsystem**
  - Dedicated 8-bit Parallel Interface, support up to 3 external devices
  - High speed hardware JPEG decoder, support both baseline sequential and progressive JPEG files
  - High quality hardware Resizer capable of tailoring JPEG image to arbitrary size
  - Support simultaneously equipping up to 2 parallel LCD and 1 serial LCD panels
  - Support LCD panel maximum resolution up to 800x600 at 16bpp

- Capable of combining display memories with up to 4 blending layers
- NAND Flash Interface for mass storages
- Full-speed USB 1.1 Device
- Multi Media Card/Secure Digital Memory Card/Memory Stick/Memory Stick Pro controller

Audio and Modem CODEC

- Wavetable synthesis with up to 64 notes
- Advanced wavetable synthesizer capable of generating simulated stereo
- Wavetable including GM full set of 128 instruments and 47 sets of percussion
- PCM Playback and Record
- Dial tone generation
- Voice Memo
- Noise Reduction
- Echo Suppression
- Advanced Sidetone Oscillation Reduction
- Digital sidetone generator with programmable gain
- Two programmable acoustic compensation filters
- GSM/GPRS quad vocoders for adaptive multirate (AMR), enhanced full rate (EFR), full rate (FR) and half rate (HR)
- GSM channel coding, equalization and A5/1 and A5/2 ciphering
- GPRS GEA and GEA2 ciphering
- Programmable GSM/GPRS Modem
- Packet Switched Data with CS1/CS2/CS3/CS4 coding schemes
- GSM Circuit Switch Data
- GPRS Class 12

User Interfaces

- 6-row × 7-column keypad controller with hardware scanner
- Support multiple key press for gaming
- SIM Card Controller with hardware flow control
- 3 UARTs with hardware flow control and speed up to 921600 bps
- IrDA modulator/demodulator with hardware framer
- Real Time Clock (RTC) operating with a separate power supply
- Serial LCD Interface with 7 bytes TX FIFO

- General Purpose I/Os (GPIOs)
- 2 Sets of Pulse Width Modulation (PWM) Output
- Alerter Output with Enhanced PWM or PDM
- Six external interrupt lines

Audio Interface and Audio Front End

- Two microphone inputs sharing one low noise amplifier with programmable gain
- Two Voice power amplifiers with programmable gain
- 2nd order Sigma-Delta A/D Converter for voice uplink path
- D/A Converter for voice downlink path
- High resolution D/A Converters for Stereo Audio playback
- Stereo analog input for stereo audio source
- Analog mixers for Stereo Audio
- Stereo to Mono Conversion
- Support half-duplex hands-free operation
- Complying with GSM 03.50

Radio Interface and Baseband Front End

- GMSK modulator with analog I and Q channel outputs
- 10-bit D/A Converter for uplink baseband I and Q signals
- 14-bit high resolution A/D Converter for downlink baseband I and Q signals
- Calibration mechanism of offset and gain mismatch for baseband A/D Converter and D/A Converter
- 10-bit D/A Converter for Automatic Power Control
- 13-bit high resolution D/A Converter for Automatic Frequency Control
- Programmable Radio RX filter
- 2 Channels Baseband Serial Interface (BSI) with 3-wire control
- 10-Pin Baseband Parallel Interface (BPI) with programmable driving strength
- Multi-band support

Power Management

- Power Down Mode for analog and digital circuits
- Processor Sleep Mode
- Pause Mode of 32KHz clocking at Standby State
- 7-channel Auxiliary 10-bit A/D Converter for charger and battery monitoring

- **<u>Test and Debug</u>**
  - Built-in digital and analog loop back modes for both Audio and Baseband Front-End
  - DAIport complying with GSM Rec.11.10
  - JTAG port for debugging embedded MCU

1.2 General Description

Figure 2 details the block diagram of MT6218B. Based on dual-processor architecture, the major processor of MT6218B is ARM7EJ -S, which mainly runs high-level GSM/GPRS protocol software as well as multi-media applications. With the other one is a digital signal processor corresponding for handling the low-level MODEM as well as advanced audio functions. Except for some mixed-signal circuitries, the other building blocks in MT6218B are connected to either the microcontroller or the digital signal processor. Specifically, MT6218B consists of the following subsystems:

- Microcontroller Unit (MCU) Subsystem, including an ARM7EJ -S RISC processor and its accompanying memory management and interrupt handling logics.
- Digital Signal Processor (DSP) Subsystem, including a DSP and its accompanying memory, memory controller, and interrupt controller.
- MCU/DSP Interface, where the MCU and the DSP exchange hardware and software information.
- Microcontroller Peripherals, which includes all user interface modules and RF control interface modules.
- Microcontroller Coprocessors, which intends to run computing-intensive processes in place of Microcontroller.
- DSP Peripherals, which are hardware accelerators for GSM/GPRS channel codec.
- Multi-media Subsystem, which integrate several advanced accelerators to support multi-media applications.
- Audio Front End, the data path of conveying analog speech from and to digital speech.
- Audio Front End, also the data path of conveying stereo audio from stereo audio source
- Baseband Front End, the data path of conveying digital signal form and to analog signal of RF modules.
- Timing Generator, generating the control signals related to the TDMA frame timing.
- Power, Reset and Clock subsystem, managing the power, reset and clock distribution inside MT6218B.

Details of the individual subsystems and blocks are described in following Chapters.

MediaTek Inc. Confidential

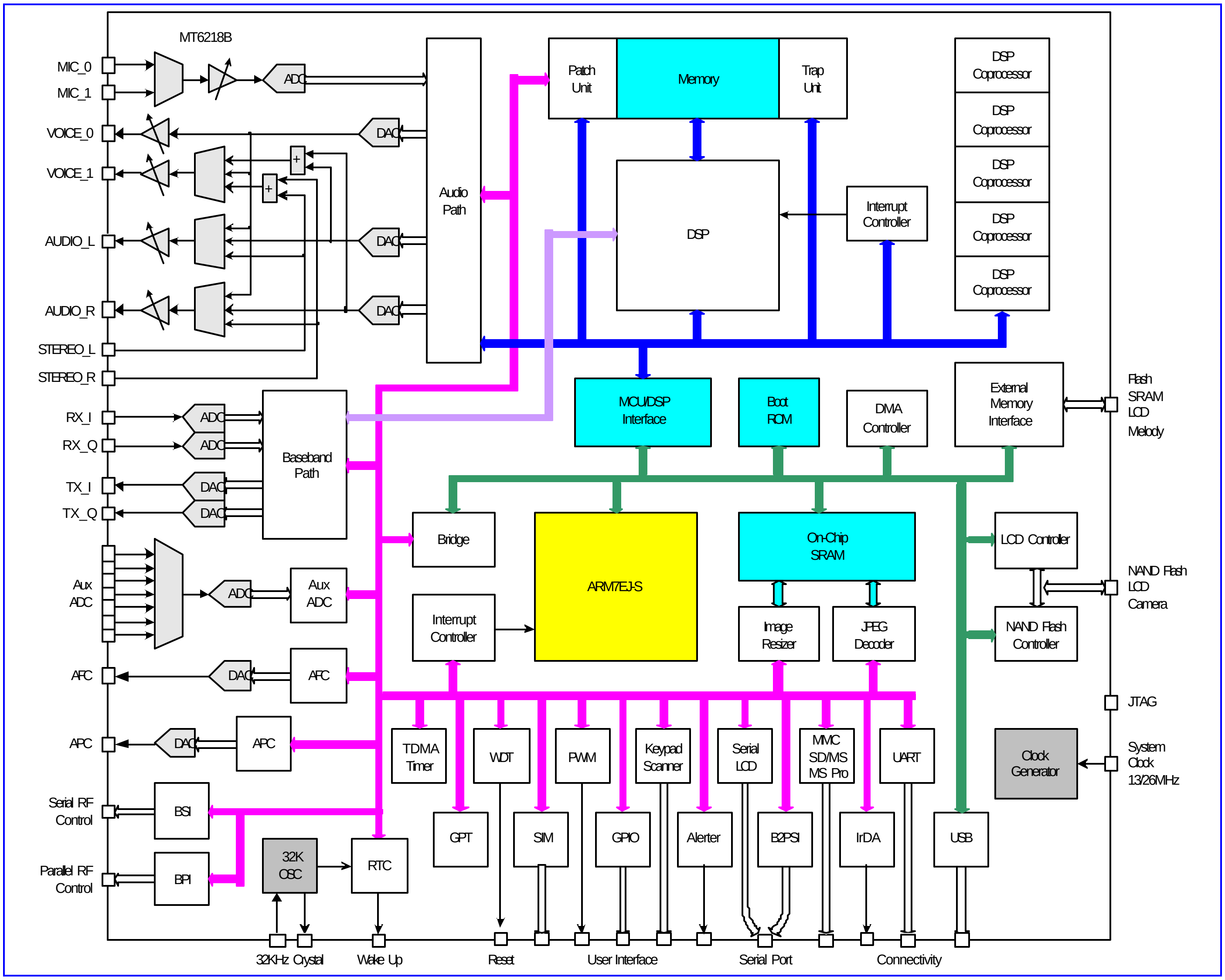

Figure 2 MT6218B block diagram.

2 Product Description

2.1 Pin Outs

One type of package for this product, TFBGA 13mm*13mm, 274-ball, 0.65 mm pitch Package, is offered.

Pin outs and the top view are illustrated in **Figure 3** for this package. Outline and dimension of package is illustrated in **Figure** 4, while the definition of package is shown in **Table** 1.

MT6218B
TFBGA 274
Top-View

	1	2	3	4	5	6	7	8	9	10	11	12	13	14	15	16	17	18	19	
A	NC	SYSCLK	VSS33	AFC_BYP	AUXADIN6	AUXADIN3	AVDD_RFE	BUPAIN	BDLAIN	AU_VIN1_P	AGND_AFE	AU_OUT0_P	AVSS_BUF	AU_FMINR	AU_MOUTR	VSS33	GPIO9	GPIO8	GPIO5	A
B	XOUT	AVDD_RTC	AVDD_PLL	AFC	AUXADIN5	AUXADIN2	APC	BUPAIP	BDLAIP	AU_VIN1_N	AU_VREF_P	AU_OUT0_N	AVDD_BUF	AU_FMINL	AU_MOUTL	VSS33	GPIO7	GPIO6	DAISYNC	B
C	BBWAKEUP	XIN	AVSS_PLL	AUX_REF	AUXADIN4	AUXADIN1	AVSS_RFE	BUPAQN	BDLAQN	AU_VIN0_N	AU_VREF_N	AU_MICBIAS_P	AU_OUT1_N	AU_M_BYP	AVDD_MBUF	VDDK	GPIO4	DAIRST	DAIPCMIN	C
D	VDDK	VSS33	TESTMODE	VDD33	VSS33	AUXADIN0	AVDD_GSMRFTX	BUPAQP	BDLAQP	AU_VIN0_P	AVDD_AFE	AU_MICBIAS_N	AU_OUT1_P	AVSS_MBUF	ESDM_CK	KROW1	DAICLK	DAIPCMOUT	KROW0	D
E	JTMS	JTDI	JTCK	JTRST#	IBOOT	VDD33	VSS33	AVSS_GSMRFTX	AGND_RFE	AVSS_AFE	VDD33	VSS33	VDD33	VSS33	VDD33	KROW4	KROW3	KROW2	VDD33	E
F	VDD33	BPI_BUS1	BPI_BUS0	JRTCK	JTDO										KCOL3	KCOL2	KCOL1	KCOL0	KROW5	F
G	BPI_BUS6	BPI_BUS5	BPI_BUS4	BPI_BUS3	BPI_BUS2										IRDA_TXD	IRDA_PDN	KCOL6	KCOL5	KCOL4	G
H	BSI_CS0	VSS33	BPI_BUS9	BPI_BUS8	BPI_BUS7										URXD3	UTXD3	IRDA_RXD	VSS33	VDDK	H
J	LSDA	LSA0	LSCK	BSI_CLK	BSI_DATA										NC	UCTS1	URTS1	URXD2	UTXD2	J
K	VDD33	LPCE1#	LSCE1#	LSCE0#	NC										SIMVCC	SIMSEL	SIMDATA	URXD1	UTXD1	K
L	LWR#	LPA0	LRD#	LRST#	LPCE0#										GPIO2	GPIO3	SIMCLK	SIMRST	VDD33	L
M	VDDK	VSS33	NLD5	NLD6	NLD7										NC	MCPWRON	MCWP	MCINS	GPIO1	M
N	NLD0	NLD1	NLD2	NLD3	NLD4										MCDA0	MCDA1	MCDA2	MCDA3	MCCK	N
P	NRE#	NWE#	NALE	NCLE	NRNB										VDD33_USB	USB_DP	USB_DM	VSS33	MCCM0	P
R	VDD33	PWM2	PWM1	NCE#	MIRQ	EA14	EA10	EA7	NC	EA0	NC	ECS4#	ECS0#	ELB#	ED1	ED0	MFIQ	WATCHDOG	VSS33_EMI	R
T	SRCLKENA	SRCLKENAI	SRCLKENAN	ALERTER	EA18	EA15	EA11	EA8	EA4	EA1	EPDN#	ECS6#	ECS1#	EUB#	ED13	ED11	ED3	VDD33_EMI	ED2	T
U	SYSRST#	GPIO0	EINT1	EA23	EA19	EA16	EA12	VSS33_EMI	EA5	EA2	EADV#	ECS5#	ECS2#	ERD#	ED14	VSS33_EMI	ED8	ED5	ED4	U
V	EINT0	EINT3	VSS33_EMI	EA22	EA20	VSS33_EMI	EA13	VDDK	EA6	VSS33_EMI	ECLK	VSS33_EMI	ECS3#	VSS33_EMI	ED15	VDDK	ED9	ED6	VSS33_EMI	V
W	EINT2	EA25	EA24	VDD33_EMI	EA21	EA17	VDD33_EMI	EA9	VDD33_EMI	EA3	VDD33_EMI	ECS7#	VDD33_EMI	EWR#	VDD33_EMI	ED12	ED10	VDD33_EMI	ED7	W
	1	2	3	4	5	6	7	8	9	10	11	12	13	14	15	16	17	18	19	

Figure 3 Top View of MT6218B TFBGA 13mm*13mm, 274-ball, 0.65 mm pitch Package

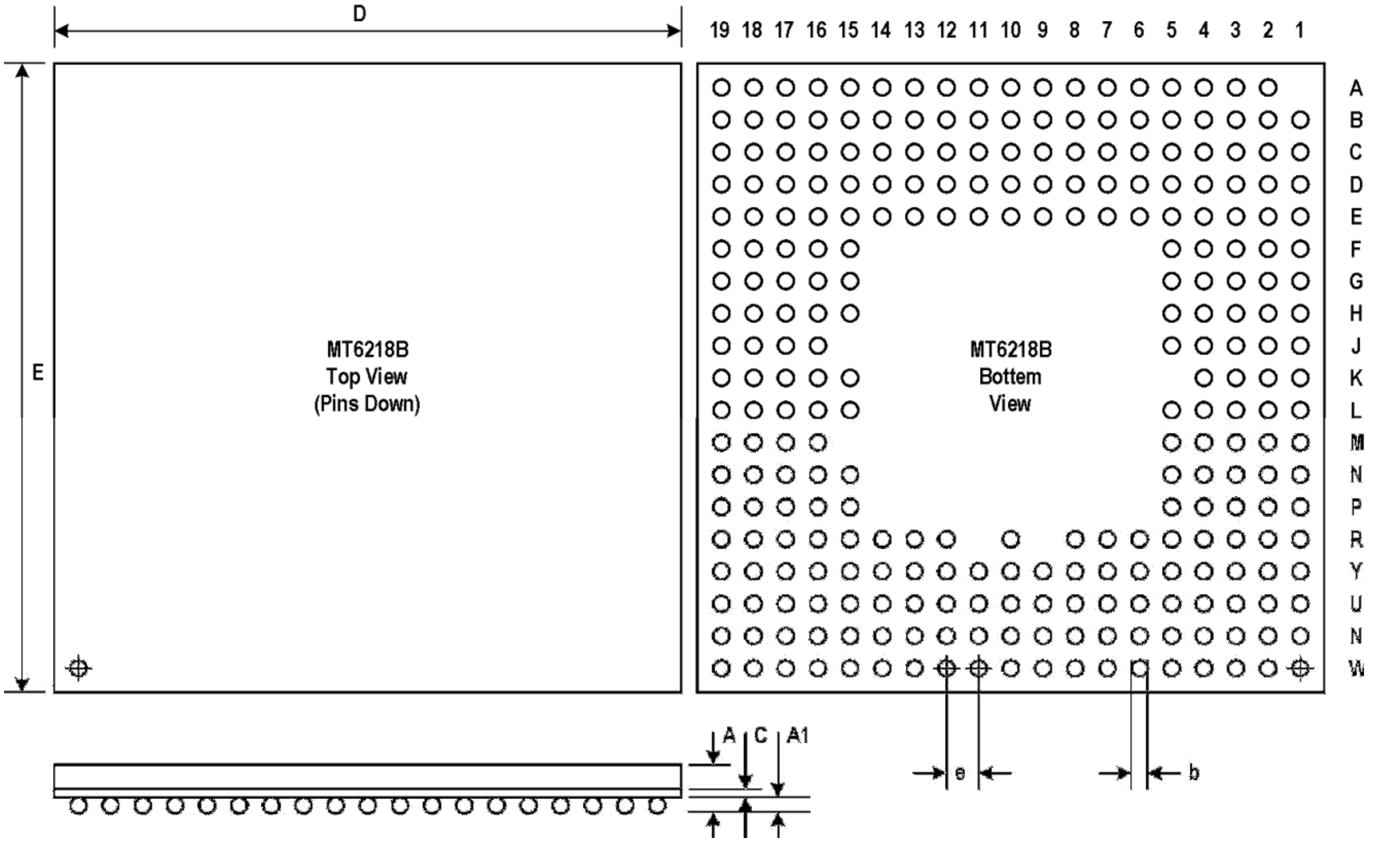

Figure 4 Outlines and Dimension of TFBGA 13mm*13mm, 274-ball, 0.65 mm pitch Package

Body Size		Ball Count	Ball Pitch	Ball Dia.	Package Thk.	Stand Off	Substrate Thk.
D	E	N	e	b	A (Max.)	A1	C
13	13	276	0.65	0.3	1.4	0.3	0.36

Table 1 Definition of TFBGA 13mm*13mm, 276-ball, 0.65 mm pitch Package (Unit: mm)

2.2 Pin Description

Ball 13X13	Name	Dir	Description	Mode0	Mode1	Mode2	Mode3	Pull	Reset
JTAG Port									
E4	**JTRST#**	I	JTAG test port reset input					PD	Input
E3	**JTCK**	I	JTAG test port clock input					PU	Input
E2	**JTDI**	I	JTAG test port data input					PU	Input
E1	**JTMS**	I	JTAG test port mode switch					PU	Input
F5	**JTDO**	O	JTAG test port data output						0
F4	**JRTCK**	O	JTAG test port returned clock output						0
RF Parallel Control Unit									
F3	**BPI_BUS0**	O	RF hard-wire control bus 0						0
F2	**BPI_BUS1**	O	RF hard-wire control bus 1						0
G5	**BPI_BUS2**	O	RF hard-wire control bus 2						0
G4	**BPI_BUS3**	O	RF hard-wire control bus 3						0
G3	**BPI_BUS4**	IO	RF hard-wire control bus 4						Input
G2	**BPI_BUS5**	IO	RF hard-wire control bus 5						Input
G1	BPI_BUS6	IO	RF hard-wire control bus 6	**GPIO10**	BPI_BUS6			PD	Input
H5	BPI_BUS7	IO	RF hard-wire control bus 7	**GPIO11**	BPI_BUS7			PD	Input
H4	BPI_BUS8	IO	RF hard-wire control bus 4	**GPIO12**	BPI_BUS8	13MHz	6.5MHz	PD	Input
H3	BPI_BUS9	IO	RF hard-wire control bus 5	**GPIO13**	BPI_BUS9	BSI_CS1		PD	Input
RF Serial Control Unit									
H1	**BSI_CS0**	O	RF 3-wire interface chip select 0						0
J5	**BSI_DATA**	O	RF 3-wire interface data output						0
J4	**BSI_CLK**	O	RF 3-wire interface clock output						0
PWM Interface									
R3	PWM1	IO	Pulse width modulated signal 1	**GPIO21**	PWM1	DSP_GPO0	TBTXFS	PD	Input
R2	PWM2	IO	Pulse width modulated signal 2	**GPIO22**	PWM2	DSP_GPO1	TBRXEN	PD	Input
T4	ALERTER	IO	Pulse width modulated signal for buzzer	**GPIO23**	ALERTER	DSP_GPO2	BTRXFS	PD	Input
Serial LCD/PM IC Interface									
J3	LSCK	IO	Serial display interface data output	**GPIO16**	LSCK		TBTXEN	PD	Input
J2	LSA0	IO	Serial display interface address output	**GPIO17**	LSA0		TDTIRQ	PD	Input
J1	LSDA	IO	Serial display interface clock output	**GPIO18**	LSDA		TCTIRQ2	PD	Input
K4	LSCE0#	IO	Serial display interface chip select 0 output	**GPIO19**	LSCE0#		TCTIRQ1	PU	Input
K3	LSCE1#	IO	Serial display interface chip select 1	**GPIO20**	LSCE1#	LPCE2#	TEVTV	PU	Input

			output				AL		
Parallel LCD/Nand-Flash Interface									
K2	LPCE1#		Parallel display interface chip select 1 output	**GPIO24**	LPCE1#	DSP_TID0	MCU_TD0	PU	
L5	**LPCE0#**		Parallel display interface chip select 0 output						
L4	**LRST#**		Parallel display interface Reset Signal						
L3	**LRD#**		Parallel display interface Read Strobe						
L2	**LPA0**		Parallel display interface address output						
L1	**LWR#**		Parallel display interface Write Strobe						
M5	**NLD7**		Parallel LCD/Nand-Flash Data 7						
M4	**NLD6**		Parallel LCD/Nand-Flash Data 6						
M3	**NLD5**		Parallel LCD/Nand-Flash Data 5						
N5	**NLD4**		Parallel LCD/Nand-Flash Data 4						
N4	**NLD3**		Parallel LCD/Nand-Flash Data 3						
N3	**NLD2**		Parallel LCD/Nand-Flash Data 2						
N2	**NLD1**		Parallel LCD/Nand-Flash Data 1						
N1	**NLD0**		Parallel LCD/Nand-Flash Data 0						
P5	NRNB		Nand-Flash Read/Busy Flag	**GPIO25**	NRNB	DSP_TID1	MCU_TID1	PU	
P4	NCLE		Nand-Flash Command Latch Signal	**GPIO26**	NCLE	DSP_TID2	MCU_TID2	PD	
P3	NALE		Nand-Flash Address Latch Signal	**GPIO27**	NALE	DSP_TID3	MCU_TID3	PD	
P2	NWE#		Nand-Flash Write Strobe	**GPIO28**	NWE#	DSP_TID4	MCU_DID	PU	
P1	NRE#		Nand-Flash Read Strobe	**GPIO29**	NRE#	DSP_TID5	MCU_DFS	PU	
R4	NCE#		Nand-Flash Chip select output	**GPIO30**	NCE#	DSP_TID6	MCU_DCK	PU	
SIM Card Interface									
L18	**SIMRST**	O	SIM card reset output						0
L17	**SIMCLK**	O	SIM card clock output						0
K15	**SIMVCC**	O	SIM card supply power control						0
K16	**SIMSEL**	O	SIM card supply power select	GPIO32	SIMSEL				0
K17	**SIMDATA**	IO	SIM card data input/output						0
Dedicated GPIO Interface									
U2	**GPIO0**	IO	General purpose input/output 0	**GPIO0**		DSP_GPO3		PD	Input
M19	**GPIO1**	IO	General purpose input/output 1	**GPIO1**	DICK			PD	Input
L15	**GPIO2**	IO	General purpose input/output 2	**GPIO2**	DID			PD	Input
L16	**GPIO3**	IO	General purpose input/output 3	**GPIO3**	DIMS			PD	Input
C17	**GPIO4**	IO	General purpose input/output 4	**GPIO4**	DSP_CKL	DSPLCK	TRASD4	PD	Input
A19	**GPIO5**	IO	General purpose input/output 5	**GPIO5**	AHB_CLK	DSPLD3	TRASD3	PD	Input
B18	**GPIO6**	IO	General purpose input/output 6	**GPIO6**	ARM_CLK	DSPLD2	TRASD2	PD	Input

B17	**GPIO7**	IO	General purpose input/output 7	**GPIO7**	SLOW_CK	DSPLD1	TRASD1	PD	Input
A18	**GPIO8**	IO	General purpose input/output 19	**GPIO8**	F32K_CK	DSPLD0	TRASD0	PD	Input
A17	**GPIO9**	IO	General purpose input/output 21	**GPIO9**			TRARSYNC	PD	Input
Miscellaneous									
U1	**SYSRST#**	I	System reset input active low						Input
R18	**WATCHDOG#**	O	Watchdog reset output						1
T3	**SRCLKENAN**	O	External TCXO enable output active low	GPO1	**SRCLKENAN**				0
T1	**SRCLKENA**	O	External TCXO enable output active high	GPO0	**SRCLKENA**				1
T2	**SRCLKENAI**	IO	External TCXO enable input	GPIO31	**SRCLKENAI**				
E5	**IBOOT**	I	Boot Device Configuration Input						Input
Keypad Interface									
G17	**KCOL6**	I	Keypad column 6					PU	Input
G18	**KCOL5**	I	Keypad column 5					PU	Input
G19	**KCOL4**	I	Keypad column 4					PU	Input
F15	**KCOL3**	I	Keypad column 3					PU	Input
F16	**KCOL2**	I	Keypad column 2					PU	Input
F17	**KCOL1**	I	Keypad column 1					PU	Input
F18	**KCOL0**	I	Keypad column 0					PU	Input
F19	**KROW5**	O	Keypad row 5						0
E16	**KROW4**	O	Keypad row 4						0
E17	**KROW3**	O	Keypad row 3						0
E18	**KROW2**	O	Keypad row 2						0
D16	**KROW1**	O	Keypad row 1						0
D19	**KROW0**	O	Keypad row 0						0
External Interrupt Interface									
V1	**EINT0**	I	External interrupt 0					PU	Input
U3	**EINT1**	I	External interrupt 1					PU	Input
W1	**EINT2**	I	External interrupt 2					PU	Input
V2	**EINT3**	I	External interrupt 3					PU	Input
R5	MIRQ	I	Interrupt to MCU	**GPIO41**	MIRQ	13MHz	6.5MHz	PU	Input
R17	MFIQ	I	Interrupt to MCU	**GPIO42**	MFIQ			PU	Input
External Memory Interface									
R16	**ED0**	IO	External memory data bus 0						Input
R15	**ED1**	IO	External memory data bus 1						Input
T19	**ED2**	IO	External memory data bus 2						Input
T17	**ED3**	IO	External memory data bus 3						Input
U19	**ED4**	IO	External memory data bus 4						Input
U18	**ED5**	IO	External memory data bus 5						Input
V18	**ED6**	IO	External memory data bus 6						Input

W19	**ED7**	IO	External memory data bus 7						Input
U17	**ED8**	IO	External memory data bus 8						Input
V17	**ED9**	IO	External memory data bus 9						Input
W17	**ED10**	IO	External memory data bus 10						Input
T16	**ED11**	IO	External memory data bus 11						Input
W16	**ED12**	IO	External memory data bus 12						Input
T15	**ED13**	IO	External memory data bus 13						Input
U15	**ED14**	IO	External memory data bus 14						Input
V15	**ED15**	IO	External memory data bus 15						Input
U14	**ERD#**	O	External memory read strobe						1
W14	**EWR#**	O	External memory write strobe						1
R13	**ECS0#**	O	External memory chip select 0						1
T13	**ECS1#**	O	External memory chip select 1						1
U13	**ECS2#**	O	External memory chip select 2						1
V13	**ECS3#**	O	External memory chip select 3						1
R12	**ECS4#**	O	External memory chip select 4						1
T12	**ECS5#**	O	External memory chip select 5						1
U12	**ECS6#**	O	External memory chip select 6						1
W12	**ECS7#**	O	External memory chip select 7						1
R14	**ELB#**	O	External memory lower byte strobe						1
T14	**EUB#**	O	External memory upper byte strobe						1
T11	**EPDN#**	O	Power Down Control Signal for PSRAM	GPO2	EPDN#				0
U11	**EADV#**	O	Address valid for burst mode flash memory						1
V11	**ECLK**	O	Clock for flash memory						0
R10	**EA0**	O	External memory address bus 0						0
T10	**EA1**	O	External memory address bus 1						0
U10	**EA2**	O	External memory address bus 2						0
W10	**EA3**	O	External memory address bus 3						0
T9	**EA4**	O	External memory address bus 4						0
U9	**EA5**	O	External memory address bus 5						0
V9	**EA6**	O	External memory address bus 6						0
R8	**EA7**	O	External memory address bus 7						0
T8	**EA8**	O	External memory address bus 8						0
W8	**EA9**	O	External memory address bus 9						0
R7	**EA10**	O	External memory address bus 10						0
T7	**EA11**	O	External memory address bus 11						0
U7	**EA12**	O	External memory address bus 12						0
V7	**EA13**	O	External memory address bus 13						0
R6	**EA14**	O	External memory address bus 14						0
T6	**EA15**	O	External memory address bus 15						0
U6	**EA16**	O	External memory address bus 16						0
W6	**EA17**	O	External memory address bus 17						0
T5	**EA18**	O	External memory address bus 18						0
U5	**EA19**	O	External memory address bus 19						0

MediaTek Inc. Confidential

V5	**EA20**	O	External memory address bus 20						0
W5	**EA21**	O	External memory address bus 21						0
V4	**EA22**	O	External memory address bus 22						0
U4	**EA23**	O	External memory address bus 23						0
W3	**EA24**	O	External memory address bus 24						0
W2	**EA25**	O	External memory address bus 25						0
USB Interface									
P16	**USB_DP**	IO	USB D+ Input/Output						
P17	**USB_DM**	IO	USB D- Input/Output						
Memory Card Interface									
P19	**MCCM0**	IO	SD Command/MS Bus State Output						
N15	**MCDA0**	IO	SD Serial Data IO 0/MS Serial Data IO						
N16	**MCDA1**	IO	SD Serial Data IO 1						
N17	**MCDA2**	IO	SD Serial Data IO 2						
N18	**MCDA3**	IO	SD Serial Data IO 3						
N19	**MCCK**	O	SD Serial Clock/MS Serial Clock Output						
M16	**MCPWRON**	O	SD Power On Control Output						
M17	MCWP	I	SD Write Protect Input	**GPIO15**	MCWP			PU	
M18	MCINS	I	SD Card Detect Input	**GPIO14**	MCINS			PU	
UART Interface									
K18	**URXD1**	I	UART 1 receive data					PU	Input
K19	**UTXD1**	O	UART 1 transmit data						1
J16	**UCTS1**	I	UART 1 clear to send					PU	Input
J17	**URTS1**	O	UART 1 request to send						1
J18	URXD2	IO	UART 2 receive data	**GPIO35**	URXD2	UCTS3		PU	Input
J19	UTXD2	IO	UART 2 transmit data	**GPIO36**	UTXD2	URTS3		PU	Input
H15	URXD3	IO	UART 3 receive data	**GPIO33**	URXD3			PU	Input
H16	UTXD3	IO	UART 3 transmit data	**GPIO34**	UTXD3			PU	Input
H17	IRDA_RXD	IO	IrDA receive data	**GPIO37**	IRDA_RXD	UCTS2		PU	Input
G15	IRDA_TXD	IO	IrDA transmit data	**GPIO38**	IRDA_TXD	URTS2		PU	Input
G16	IRDA_PDN	IO	IrDA Power Down Control	**GPIO39**	IRDA_PDN			PU	Input
Digital Audio Interface									
D17	DAICLK	IO	DAI clock output	**GPIO43**	DAICLK	TDMA_CK	TRACLK	PU	Input
D18	DAIPCMOUT	IO	DAI pcm data out	**GPIO44**	DAIPCMOUT	TDMA_D1	TRASYNC	PD	Input
C19	DAIPCMIN	IO	DAI pcm data input	**GPIO45**	DAIPCMIN	TDMA_D2	TRASD7	PU	Input
C18	DAIRST	IO	DAI reset signal input	**GPIO47**	DAIRST	TDMA_FS	TRASD6	PU	Input
B19	DAISYNC	IO	DAI frame synchronization signal output	**GPIO46**	DAISYNC	BFEPRBO	TRASD5	PU	Input
Analog Interface									

B15	**AU_MOUL**		Audio analog output left channel						
A15	**AU_MOUR**		Audio analog output right channel						
C14	**AU_M_BYP**		Audio DAC bypass pin						
B14	**AU_FMINL**		FM radio analog input left channel						
A14	**AU_FMINR**		FM radio analog input right channel						
D13	**AU_OUT1_P**		Earphone 1 amplifier output (+)						
C13	**AU_OUT1_N**		Earphone 1 amplifier output (-)						
B12	**AU_OUT0_N**		Earphone 0 amplifier output (-)						
A12	**AU_OUT0_P**		Earphone 0 amplifier output (+)						
C12	**AU_MICBIAS_P**		Microphone bias supply (+)						
D12	**AU_MICBIAS_N**		Microphone bias supply (-)						
C11	**AU_VREF_N**		Audio reference voltage (-)						
B11	**AU_VREF_P**		Audio reference voltage (+)						
D10	**AU_VIN0_P**		Microphone 0 amplifier input (+)						
C10	**AU_VIN0_N**		Microphone 0 amplifier input (-)						
B10	**AU_VIN1_N**		Microphone 1 amplifier input (-)						
A10	**AU_VIN1_P**		Microphone 1 amplifier input (+)						
D9	**BDLAQP**		Quadrature input (Q+) baseband codec downlink						
C9	**BDLAQN**		Quadrature input (Q-) baseband codec downlink						
A9	**BDLAIN**		In-phase input (I+) baseband codec downlink						
B9	**BDLAIP**		In-phase input (I-) baseband codec downlink						
B8	**BUPAIP**		In-phase output (I+) baseband codec uplink						
A8	**BUPAIN**		In-phase output (I-) baseband codec uplink						
C8	**BUPAQN**		Quadrature output (Q+) baseband codec uplink						
D8	**BUPAQP**		Quadrature output (Q-) baseband codec uplink						
B7	**APC**		Automatic power control DAC output						
D6	**AUXADIN**		Auxiliary ADC input 0						

	0								
C6	**AUXADIN 1**		Auxiliary ADC input 1						
B6	**AUXADIN 2**		Auxiliary ADC input 2						
A6	**AUXADIN 3**		Auxiliary ADC input 3						
C5	**AUXADIN 4**		Auxiliary ADC input 4						
B5	**AUXADIN 5**		Auxiliary ADC input 5						
A5	**AUXADIN 6**		Auxiliary ADC input 6						
C4	**AUX_REF**		Auxiliary ADC reference voltage input						
B4	**AFC**		Automatic frequency control DAC output						
A4	**AFC_BYP**		Automatic frequency control DAC bypass capacitance						
VCXO Interface									
A2	**SYSCLK**		13MHz or 26MHz system clock input						
RTC Interface									
C2	**XIN**		32.768 KHz crystal input						
B1	**XOUT**		32.768 KHz crystal output						
C1	**BBWAKEUP**	O	Baseband power on/off control						1
Supply Voltages									
D1	**VDDK**		Supply voltage of internal logic						
M1	**VDDK**		Supply voltage of internal logic						
V8	**VDDK**		Supply voltage of internal logic						
V16	**VDDK**		Supply voltage of internal logic						
H19	**VDDK**		Supply voltage of internal logic						
C16	**VDDK**		Supply voltage of internal logic						
W4	**VDD33_EMI**		Supply voltage of memory interface driver						
W7	**VDD33_EMI**		Supply voltage of memory interface driver						
W9	**VDD33_EMI**		Supply voltage of memory interface driver						
W11	**VDD33_EMI**		Supply voltage of memory interface driver						
W13	**VDD33_EMI**		Supply voltage of memory interface driver						
W15	**VDD33_EMI**		Supply voltage of memory interface driver						
W18	**VDD33_EMI**		Supply voltage of memory interface driver						
T18	**VDD33_EMI**		Supply voltage of memory interface driver						

V3	**VSS33_EMI**		Ground of memory interface driver						
V6	**VSS33_EMI**		Ground of memory interface driver						
U8	**VSS33_EMI**		Ground of memory interface driver						
V10	**VSS33_EMI**		Ground of memory interface driver						
V12	**VSS33_EMI**		Ground of memory interface driver						
V14	**VSS33_EMI**		Ground of memory interface driver						
U16	**VSS33_EMI**		Ground of memory interface driver						
V19	**VSS33_EMI**		Ground of memory interface driver						
R19	**VSS33_EMI**		Ground of memory interface driver						
P19	**VDD33_USB**		Supply voltage of drivers for USB						
D4	**VDD33**		Supply voltage of drivers except memory interface and USB						
F1	**VDD33**		Supply voltage of drivers except memory interface and USB						
K1	**VDD33**		Supply voltage of drivers except memory interface and USB						
R1	**VDD33**		Supply voltage of drivers except memory interface and USB						
L19	**VDD33**		Supply voltage of drivers except memory interface and USB						
E19	**VDD33**		Supply voltage of drivers except memory interface and USB						
E15	**VDD33**		Supply voltage of drivers except memory interface and USB						
E13	**VDD33**		Supply voltage of drivers except memory interface and USB						
E11	**VDD33**		Supply voltage of drivers except memory interface and USB						
E6	**VDD33**		Supply voltage of drivers except memory interface and USB						
A3	**VSS33**		Ground of drivers except memory interface						
D2	**VSS33**		Ground of drivers except memory interface						
D5	**VSS33**		Ground of drivers except memory interface						
H2	**VSS33**		Ground of drivers except memory interface						
M2	**VSS33**		Ground of drivers except memory interface						
P18	**VSS33**		Ground of drivers except memory interface						

H18	**VSS33**		Ground of drivers except memory interface						
A16	**VSS33**		Ground of drivers except memory interface						
B16	**VSS33**		Ground of drivers except memory interface						
E14	**VSS33**		Ground of drivers except memory interface						
E12	**VSS33**		Ground of drivers except memory interface						
E7	**VSS33**		Ground of drivers except memory interface						
B3	**AVDD_PLL**		Supply voltage for PLL						
C3	**AVSS_PLL**		Ground for PLL supply						
B2	**AVDD_RTC**		Supply voltage for Real Time Clock						
Analog Supplies									
C15	**AVDD_MBUF**		Supply Voltage for Audio band section						
D14	**AVSS_MBUF**		GND for Audio band section						
B13	**AVDD_BUF**		Supply voltage for voice band transmit section						
A13	**AVSS_BUF**		GND for voice band transmit section						
D11	**AVDD_AFE**		Supply voltage for voice band receive section						
A11	**AGND_AFE**		GND reference voltage for voice band section						
E10	**AVSS_AFE**		GND for voice band receive section						
E9	**AGND_RFE**		GND reference voltage for baseband section, APC, AFC and AUXADC						
E8	**AVSS_GSMRFTX**		GND for baseband transmit section						
D7	**AVDD_GSMRFTX**		Supply voltage for baseband transmit section						
C7	**AVSS_RFE**		GND for baseband receive section, APC, AFC and AUXADC						
A7	**AVDD_RFE**		Supply voltage for baseband receive section, APC, AFC and AUXADC						

Table 2 Pin Descriptions (**Bolded** types are functions at reset)

MediaTek Inc. Confidential

2.3 Power Description

Ball 13X13		Name	IO Supply	IO GND	Core Supply	Core GND	Remark
B17		**GPIO7**	VDD33	VSS33	VDDK	VSSK	
A18		**GPIO8**			VDDK	VSSK	
A17		**GPIO9**			VDDK	VSSK	
B16		**VSS33**					
A16		**VSS33**					
C16		**VDDK**					Typ. 1.8V
E15		**VDD33**					Typ. 2.8V
E14		**VSS33**					
E13		**VDD33**					Typ. 2.8V
E12		**VSS33**					
E11		**VDD33**					Typ. 2.8V
E7		**VSS33**					
E6		**VDD33**					Typ. 2.8V
D5		**VSS33**					
D4		**VDD33**					Typ. 2.8V
A3		**VSS33**					
B3		**AVDD_PLL**					Typ. 2.8V
A2		SYSCLK	**AVDD_PLL**	**AVSS_PLL**	**AVDD_PLL**	**AVSS_PLL**	
C3		**AVSS_PLL**					
B2		**AVDD_RTC**					Typ. 1.5V
B1		XOUT	**AVDD_RTC**	**VSS33**	**AVDD_RTC**	**VSS33**	
C2		XIN	**AVDD_RTC**	**VSS33**	**AVDD_RTC**	**VSS33**	
C1		BBWAKEUP	**AVDD_RTC**	**VSS33**	**AVDD_RTC**	**VSS33**	
D2		**VSS33**					
D3		**TESTMODE**	VDD33	VSS33	VDDK	VSSK	
D1		**VDDK**					Typ. 1.8V
E5		IBOOT	VDD33	VSS33	VDDK	VSSK	
E4		JTRST#			VDDK	VSSK	
E3		JTCK			VDDK	VSSK	
E2		JTDI			VDDK	VSSK	
E1		JTMS			VDDK	VSSK	
F5		JTDO			VDDK	VSSK	
F4		JRTCK			VDDK	VSSK	
F3		BPI_BUS0			VDDK	VSSK	
F2		BPI_BUS1			VDDK	VSSK	

MediaTek Inc. Confidential

F1		**VDD33**					Typ. 2.8V
G5		BPI_BUS2	VDD33	VSS33	VDDK	VSSK	
G4		BPI_BUS3			VDDK	VSSK	
G3		BPI_BUS4			VDDK	VSSK	
G2		BPI_BUS5			VDDK	VSSK	
G1		BPI_BUS6			VDDK	VSSK	
H5		BPI_BUS7			VDDK	VSSK	
H4		BPI_BUS8			VDDK	VSSK	
H2		**VSS33**					
H3		BPI_BUS9	VDD33	VSS33	VDDK	VSSK	
H1		BSI_CS0			VDDK	VSSK	
J5		BSI_DATA			VDDK	VSSK	
J4		BSI_CLK			VDDK	VSSK	
J3		LSCK			VDDK	VSSK	
J2		LSA0			VDDK	VSSK	
J1		LSDA			VDDK	VSSK	
K4		LSCE0#			VDDK	VSSK	
K3		LSCE1#			VDDK	VSSK	
K1		VDD33					
K2		LPCE1#	VDD33	VSS33	VDDK	VSSK	
L5		LPCE0#			VDDK	VSSK	
L4		LRST#			VDDK	VSSK	
L3		LRD#			VDDK	VSSK	
L2		LPA0			VDDK	VSSK	
L1		LWR#			VDDK	VSSK	
M5		NLD7			VDDK	VSSK	
M4		NLD6			VDDK	VSSK	
M3		NLD5			VDDK	VSSK	
M2		**VSS33**					
M1		VDDK					Typ. 1.8V
N5		NLD4	VDD33	VSS33	VDDK	VSSK	
N4		NLD3			VDDK	VSSK	
N3		NLD2			VDDK	VSSK	
N2		NLD1			VDDK	VSSK	
N1		NLD0			VDDK	VSSK	
P5		NRNB			VDDK	VSSK	
P4		NCLE			VDDK	VSSK	
P3		NALE			VDDK	VSSK	
P2		NEW#			VDDK	VSSK	

MediaTek Inc. Confidential

P1		NRE#			VDDK	VSSK	
R4		NCE#			VDDK	VSSK	
R1		VDD33					Typ. 2.8V
R3		PWM1	VDD33	VSS33	VDDK	VSSK	
R2		PWM2			VDDK	VSSK	
T4		ALERTER			VDDK	VSSK	
T1		SRCLKENA			VDDK	VSSK	
T3		SRCLKENAN			VDDK	VSSK	
T2		SRCLKENAI			VDDK	VSSK	
U1		SYSRST#			VDDK	VSSK	
U2		GPIO0			VDDK	VSSK	
V1		EINT0			VDDK	VSSK	
U3		EINT1			VDDK	VSSK	
W1		EINT2			VDDK	VSSK	
V2		EINT3			VDDK	VSSK	
V3		VSS33_EMI					
W2		EA25	VDD33_EMI	VSS33_EMI	VDDK	VSSK	
W3		EA24			VDDK	VSSK	
U4		EA23			VDDK	VSSK	
V4		EA22			VDDK	VSSK	
W4		**VDD33_EMI**					Typ. 1.8~2.8V
R5		MIRQ	VDD33_EMI	VSS33_EMI	VDDK	VSSK	
W5		EA21			VDDK	VSSK	
V5		EA20			VDDK	VSSK	
U5		EA19			VDDK	VSSK	
T6		EA18			VDDK	VSSK	
V6		**VSS33_EMI**					
W6		EA17	VDD33_EMI	VSS33_EMI	VDDK	VSSK	
U6		EA16			VDDK	VSSK	
T6		EA15			VDDK	VSSK	
R6		EA14			VDDK	VSSK	
W7		**VDD33_EMI**					Typ. 1.8~2.8V
V7		EA13	VDD33_EMI	VSS33_EMI	VDDK	VSSK	
U7		EA12			VDDK	VSSK	
T7		EA11			VDDK	VSSK	
R7		EA10			VDDK	VSSK	
V8		VDDK					Typ. 1.8V
U8		**VSS33_EMI**					
W8		EA9	VDD33_EMI	VSS33_EMI	VDDK	VSSK	

MediaTek Inc. Confidential

T8		EA8			VDDK	VSSK	
R8		EA7			VDDK	VSSK	
V9		EA6			VDDK	VSSK	
W9		**VDD33_EMI**					Typ. 1.8~2.8V
U9		EA5	VDD33_EMI	VSS33_EMI	VDDK	VSSK	
T9		EA4			VDDK	VSSK	
W10		EA3			VDDK	VSSK	
V10		**VSS33_EMI**					
U10		EA2	VDD33_EMI	VSS33_EMI	VDDK	VSSK	
T10		EA1			VDDK	VSSK	
R10		EA0			VDDK	VSSK	
W11		**VDD33_EMI**					Typ. 1.8~2.8V
U11		EADV#	VDD33_EMI	VSS33_EMI	VDDK	VSSK	
V11		ECLK			VDDK	VSSK	
T11		EPDN#			VDDK	VSSK	
V12		**VSS33_EMI**					
W12		ECS7#	VDD33_EMI	VSS33_EMI	VDDK	VSSK	
U12		ECS6#			VDDK	VSSK	
T12		ECS5#			VDDK	VSSK	
R12		ECS4#			VDDK	VSSK	
W13		**VDD33_EMI**					Typ. 1.8~2.8V
V13		ECS3#	VDD33_EMI	VSS33_EMI	VDDK	VSSK	
U13		ECS2#			VDDK	VSSK	
T13		ECS1#			VDDK	VSSK	
R13		ECS0#			VDDK	VSSK	
V14		**VSS33_EMI**					
W14		EWR#	VDD33_EMI	VSS33_EMI	VDDK	VSSK	
U14		ERD#			VDDK	VSSK	
T14		EUB#			VDDK	VSSK	
R14		ELB#			VDDK	VSSK	
W15		**VDD33_EMI**					Typ. 1.8~2.8V
V15		ED15	VDD33_EMI	VSS33_EMI	VDDK	VSSK	
U15		ED14			VDDK	VSSK	
T15		ED13			VDDK	VSSK	
W16		ED12			VDDK	VSSK	
V16		**VDDK**					
U16		**VSS33_EMI**					
T16		ED11	VDD33_EMI	VSS33_EMI	VDDK	VSSK	
W17		ED10			VDDK	VSSK	

V17		ED9			VDDK	VSSK	
W18		**VDD33_EMI**					Typ. 1.8~2.8V
U17		ED8	VDD33_EMI	VSS33_EMI	VDDK	VSSK	
W19		ED7			VDDK	VSSK	
V18		ED6			VDDK	VSSK	
V19		**VSS33_EMI**					
U18		ED5	VDD33_EMI	VSS33_EMI	VDDK	VSSK	
U19		ED4			VDDK	VSSK	
T17		ED3			VDDK	VSSK	
T18		**VDD33_EMI**					Typ. 1.8~2.8V
T19		ED2	VDD33_EMI	VSS33_EMI	VDDK	VSSK	
R15		ED1			VDDK	VSSK	
R16		ED0			VDDK	VSSK	
R17		MFIQ			VDDK	VSSK	
R18		WATCHDOG			VDDK	VSSK	
R19		**VSS33_EMI**					
P15		**VDD33_USB**					Typ. 3.3V
P16		USB_DP	VDD33_USB	VSS33_USB	VDDK	VSSK	
P17		USB_DM			VDDK	VSSK	
P18		**VSS33**					
P19		MCCM0	VDD33	VSS33	VDDK	VSSK	
N15		MCDA0			VDDK	VSSK	
N16		MCDA1			VDDK	VSSK	
N17		MCDA2			VDDK	VSSK	
N18		MCDA3			VDDK	VSSK	
N19		MCCK			VDDK	VSSK	
M16		MCPWRON			VDDK	VSSK	
M17		MCWP			VDDK	VSSK	
M18		MCINS			VDDK	VSSK	
M19		GPIO1			VDDK	VSSK	
L15		GPIO2			VDDK	VSSK	
L16		GPIO3			VDDK	VSSK	
L19		**VDD33**					Typ. 2.8V
L18		SIMRST	VDD33	VSS33	VDDK	VSSK	
L17		SIMCLK			VDDK	VSSK	
K15		SIMVCC			VDDK	VSSK	
K16		SIMSEL			VDDK	VSSK	
K17		SIMDATA			VDDK	VSSK	
K18		URXD1			VDDK	VSSK	

MediaTek Inc. Confidential

K19		UTXD1			VDDK	VSSK	
J16		UCTS1			VDDK	VSSK	
J17		**URTS1**			VDDK	VSSK	
J18		URXD2			VDDK	VSSK	
J19		UTXD2			VDDK	VSSK	
H15		URXD3			VDDK	VSSK	
H16		UTXD3			VDDK	VSSK	
H19		VDDK			VDDK	VSSK	Typ. 1.8V
H18		VSS33			VDDK	VSSK	
H17		IRDA_PDN	VDD33	VSS33	VDDK	VSSK	
G15		IRDA_TXD			VDDK	VSSK	
G16		IRDA_RXD			VDDK	VSSK	
G17		KCOL6			VDDK	VSSK	
G18		KCOL5			VDDK	VSSK	
G19		KCOL4			VDDK	VSSK	
F15		KCOL3			VDDK	VSSK	
F16		KCOL2			VDDK	VSSK	
F17		KCOL1			VDDK	VSSK	
F18		KCOL0			VDDK	VSSK	
F19		KROW5			VDDK	VSSK	
E16		KROW4			VDDK	VSSK	
E17		KROW3			VDDK	VSSK	
E18		KROW2			VDDK	VSSK	
E19		VDD33					Typ. 2.8V
D16		KROW1	VDD33	VSS33	VDDK	VSSK	
D19		KROW0			VDDK	VSSK	
D17		DAICLK			VDDK	VSSK	
D18		DAIPCMOUT			VDDK	VSSK	
C19		**DAIPCMIN**			VDDK	VSSK	
C18		**DAIRST**			VDDK	VSSK	
B19		DAISYNC			VDDK	VSSK	
C17		**GPIO4**			VDDK	VSSK	
A19		**GPIO5**			VDDK	VSSK	
A18		**GPIO6**			VDDK	VSSK	
C15		**AVDD_MBUF**					Typ. 2.8V
B15		AU_MOUTL					
A15		AU_MOUTR					
D14		**AVSS_MBUF**					
C14		AU_M_BYP					

B14		AU_FMINL					
A14		AU_FMINR					
D13		AU_OUT1_P					
C13		AU_OUT1_N					
B12		AU_OUT0_N					
B13		**AVDD_BUF**					Typ. 2.8V
A12		AU_OUT0_P					
A13		**AVSS_BUF**					
C12		AU_MICBIAS_P					
D12		AU_MICBIAS_N					
D11		**AVDD_AFE**					Typ. 2.8V
C11		AU_VREF_N					
B11		AU_VREF_P					
A11		**AGND_AFE**					
D10		AU_VIN0_P					
C10		AU_VIN0_N					
B10		AU_VIN1_N					
A10		AU_VIN1_P					
E10		**AVSS_AFE**					
D9		BDLAQP					
C9		BDLAQN					
E9		**AGND_RFE**					
A9		BDLAIN					
B9		BDLAIP					
E8		**AVSS_GSMRFTX**					
B8		BUPAIP					
A8		BUPAIN					
D7		**AVDD_GSMRFTX**					Typ. 2.8V
C8		BUPAQN					
D8		BUPAQP					
C7		**AVSS_RFE**					
B7		APC					
A7		**AVDD_RFE**					Typ. 2.8V
D6		AUXADIN0					
C6		AUXADIN1					
B6		AUXADIN2					
A6		AUXADIN3					
C5		AUXADIN4					
B5		AUXADIN5					

MediaTek Inc. Confidential

A5		AUXADIN6					
C4		AUX_REF					
B4		AFC					
A4		AFC_BYP					

Table 3 Power Descriptions

3 Micro-Controller Unit Subsystem

Figure 5 illustrates the block diagram of the Micro-Controller Unit Subsystem in MT6218B. A 32-bit RISC processor, ARM7EJ-S, plays the role of the major bus master controlling the whole subsystem. Essentially, it communicates with all the other on-chip modules by way of system buses: AHB Bus and APB Bus.

All bus transactions originate from bus masters, while slaves can only respond requests from bus masters. Prior to a data transfer can be established, bus master must ask for bus ownership. This is accomplished by request-grant handshaking protocol between masters and arbiters.

Two levels of bus hierarchy are designed to provide alternatives for different performance requirements, i.e. AHB Bus and APB Bus for system back bone and peripheral buses, respectively. To have high performance and proper efficiency, the AHB Bus provides 32-bit data path with multiplex scheme for bus interconnections.

For APB Bus, it supports 16-bit addressing and both 16-bit and 32-bit data paths. Since it is designated to reduce interface complexity for lower data transfer rate, it is isolated from high bandwidth AHB Bus by APB Bridge. APB Bus is also optimized for minimal power consumption by employing gated-clock scheme.

Whenever the target slave locates on AHB Bus, the transaction is conducted directly on AHB Bus. However, if the target slave is a peripheral, the transaction should be further forwarded to APB Bus by APB Bridge.

Only memory addressing method is used in MT6218B based system. All components are mapped onto MCU 32-bit address space. A Memory Management Unit is employed to have a central decode scheme. It generates certain selection signals for each memory-addressed modules on AHB Bus.

In order to off-load the processor core, a DMA Controller is designated to act as a master and share the bus resources on AHB Bus to do fast data movement between modules. This controller comprises thirteen DMA channels.

The Interrupt Controller provides a software interface to manipulate interrupt events. It can handle up to 32 interrupt sources asserted at the same time. In general, it generates 2 levels of interrupt requests, FIQ and IRQ, to the processor.

A 256K Byte SRAM is provided for acting as system memory for high-speed data access. For factory programming purpose, a Boot ROM module is used. These two modules use the same Internal Memory Controller to connect to AHB Bus.

External Memory Interface supports both 8-bit and 16-bit devices. Since AHB Bus is 32-bit wide, all the data transfer will be converted into several 8-bit or 16-bit cycles depending on the data width of target device. Note that, this interface is specific to both synchronous and asynchronous components, like Flash, SRAM and parallel LCD. This interface supports also page and burst mode type of Flash.

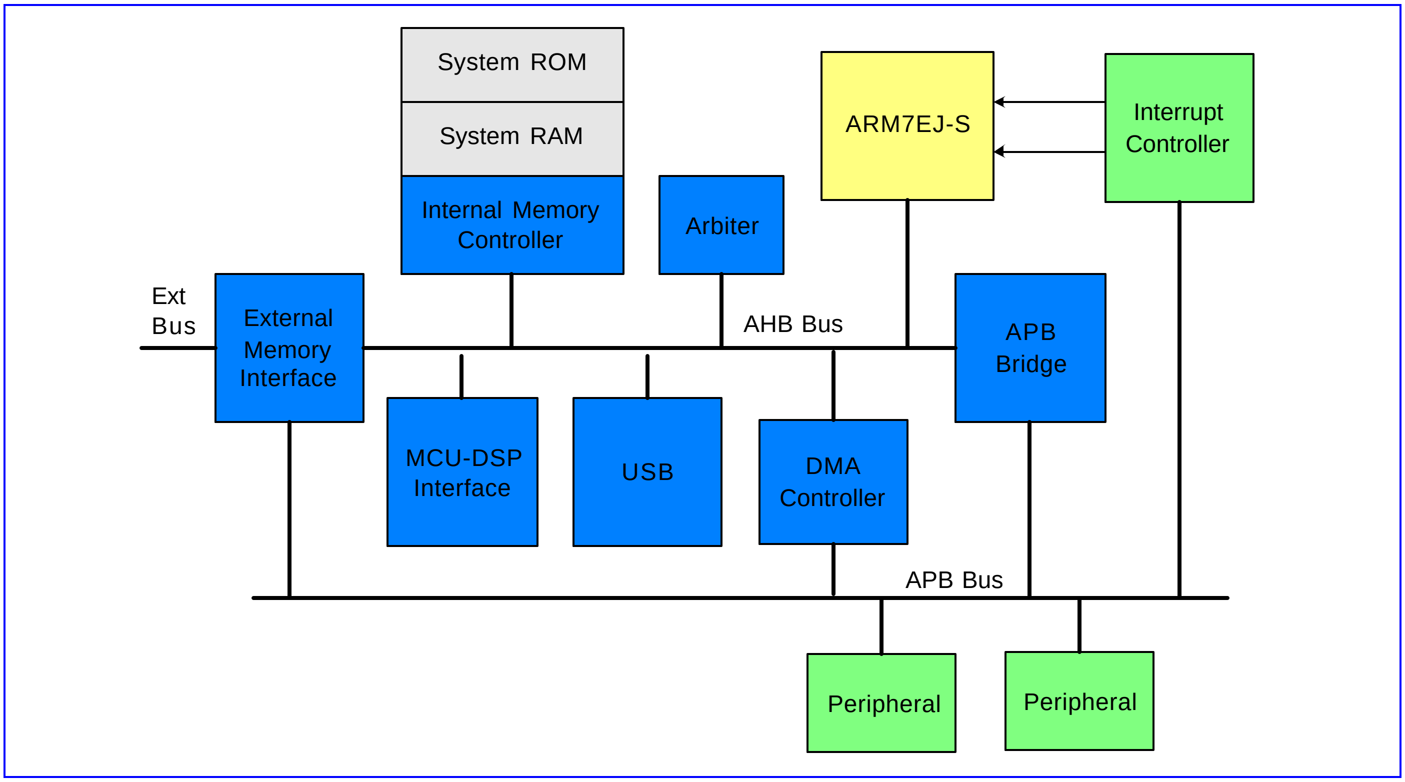

Figure 5 Block Diagram of the Micro-Controller Unit Subsystem in MT6218B

3.1 Processor Core

3.1.1 General Description

The Micro-Controller Unit Subsystem in MT6218B is built up with a 32-bit RISC core, ARM7EJ-S that is based on Von Neumann architecture with a single 32-bit data bus carrying both instructions and data. The memory interface of ARM7EJ -S is totally compliant to AMBA based bus system. Basically, it can be connected to AHB Bus directly.

3.2 Memory Management

3.2.1 General Description

The processor core of MT6218B, ARM7EJ -S, supports only memory addressing method for instruction fetch and data access. It manages a 32-bit address space that has addressing capability up to 4GB. System RAM, System ROM, Registers, MCU Peripherals and external components are all mapped onto such 32-bit address space, as depicted in **Figure 6**.

MediaTek Inc. Confidential

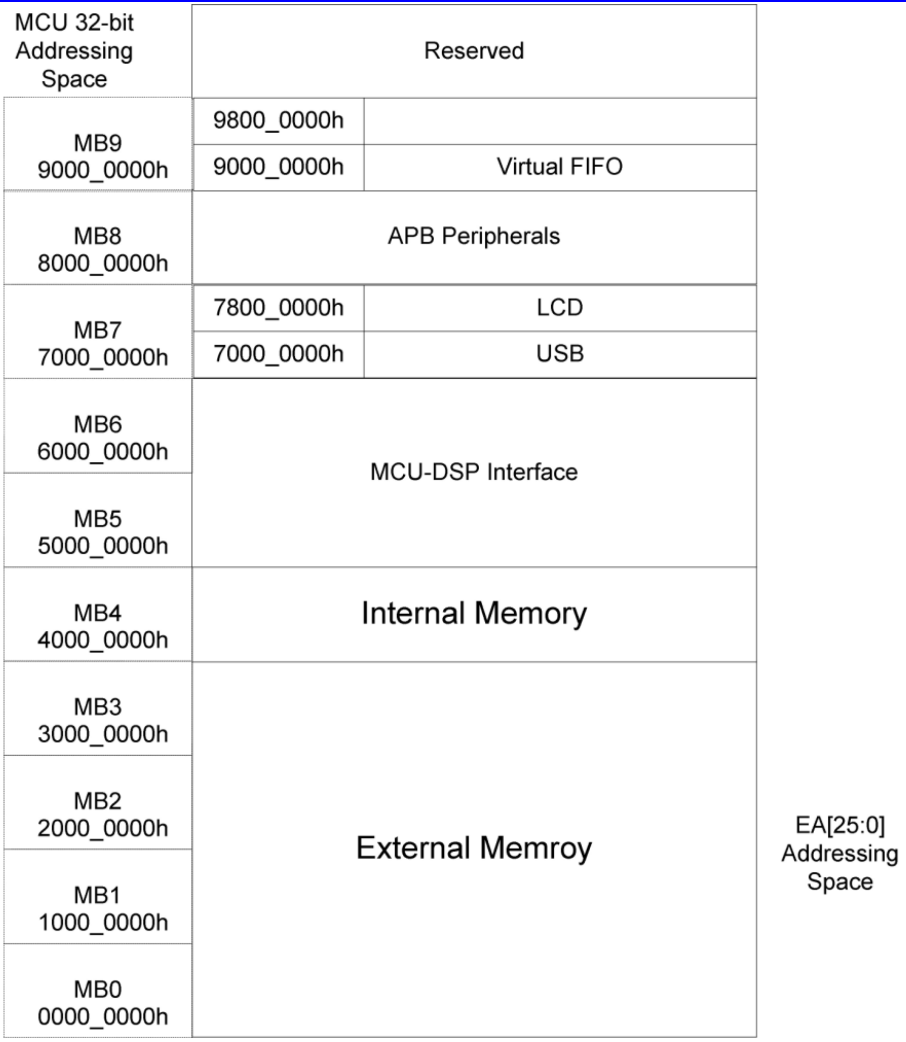

Figure 6 The Memory Layout of MT6218B

The address space is organized as basis of blocks with size of 256M Bytes for each. Memory blocks MB0-MB9 are determined and currently dedicated to specific functions, as shown in **Table 4**, while the others are reserved for future usage. Essentially, the block number is uniquely selected by address line A31-A28 of internal system bus.

Memory Block	Block Address A31-A28	Address Range	Description
MB0	0h	00000000h-07FFFFFFh	Boot Code, EXT SRAM or EXT Flash/MISC
		08000000h-0FFFFFFFh	EXT SRAM or EXT Flash/MISC
MB1	1h	10000000h-17FFFFFFh	EXT SRAM or EXT Flash/MISC
		18000000h-1FFFFFFFh	EXT SRAM or EXT Flash/MISC
MB2	2h	20000000h-27FFFFFFh	EXT SRAM or EXT Flash/MISC
		28000000h-2FFFFFFFh	EXT SRAM or EXT Flash/MISC
MB3	3h	30000000h-37FFFFFFh	EXT SRAM or EXT Flash/MISC
		38000000h-3FFFFFFFh	EXT SRAM or EXT Flash/MISC
MB4	4h	40000000h-47FFFFFFh	System RAM

MediaTek Inc. Confidential

		48000000h-4FFFFFFFh	System ROM
MB5	5h	50000000h-5FFFFFFFh	MCU-DSP Interface
MB6	6h	60000000h-6FFFFFFFh	
MB7	7h	70000000h-77FFFFFFh	USB
		78000000h-7FFFFFFFh	LCD
MB8	8h	80000000h-8FFFFFFFh	APB Slaves
MB9	9h	90000000h-97FFFFFFh	Virtual FIFO

Table 4 Definitions of Memory Blocks in MT6218B

External Access

To have external access, the MT6218B outputs 26 bits (A25-A0) of address lines along with 8 selection signals that correspond to associated memory blocks. That is, MT6218B can support at most 8 MCU addressable external components. The data width of internal system bus is fixed as 32-bit wide, while the data width of the external components can be either 8 or 16 bit.

Since devices are usually available with variety operating grades, adaptive configurations for different applications are needed. MT6218B provides software programmable registers to configure to adapt operating conditions in terms of different wait-states.

Memory Re-mapping Mechanism

To permit system being configured with more flexible, a memory re-mapping mechanism is provided. It allows software program to swap BANK0 (ECS0#) and BANK1 (ECS1#) dynamically. Whenever the bit value of RM0 in register EMI_REMAP is changed, these two banks will be swapped accordingly. Besides, it also permits system being boot in different sequence as detailed in 0 Boot Sequence.

Boot Sequence

Since the ARM7EJ-S core always starts to fetch instructions from the lowest memory address at 00000000h (MB0) after system being reset. It is designed to have a dynamic mapping architecture capable of associating Boot Code, external Flash or external SRAM with memory block MB0.

By default, the Boot Code is mapped onto MB0 while the state of IBOOT is “0”. But, this configuration can be changed by altering the state of IBOOT before system reset or programming bit value of RM1 in register EMI_REMAP directly.

MT6218B system provides two kinds of boot up scheme:

- Start up system of running codes from Boot Code for factory programming
- Start up system of running codes from external FLASH or ROM device for normal operation

Boot Code

The Boot Code is placed together with Memory Re-Mapping Mechanism in External Memory Controller and comprises just two words of instructions as shown below. It is quite obvious that there is a jump instruction that leads the processor to run the code started at address of 48000000h where the System ROM is placed.

ADDRESS	BINARY CODE	ASSEMBLY
00000000h	E51FF004h	LDR PC, 0x4
00000004h	48000000h	(DATA)

Factory Programming

The configuration for factory programming is shown in **Figure 7**. Usually the Factory Programming Host connects with MT6218B by way of UART interface. To have it works properly, the system should boot up from Boot Code. That is the IBOOT should be tied to GND. The down load speed can be up to 921K bps while MCU is running at 26MHz.

After system being reset, the Boot Code will guide the processor to run the Factory Programming software placed in System ROM. Then, MT6218B will start and continue to poll the UART1 port until valid information is detected. The first information received on the UART1 will be used to configure the chip for factory programming. The Flash down loader program is then transferred into System RAM or external SRAM.

Further information will be detailed in MT6218B Software Programming Specification.

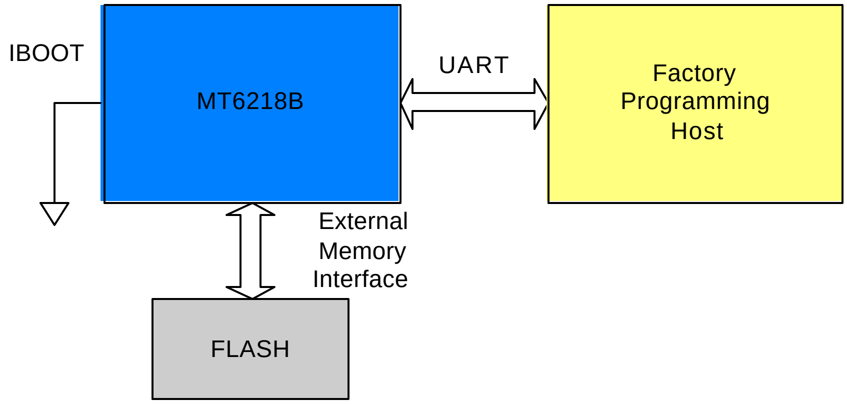

Figure 7 System configuration required for factory programming

Little Endian Mode

The MT6218B system always treats 32-bit words of memory in Little Endian format. In Little Endian mode, the lowest numbered byte in a word is stored in the least significant byte, and the highest numbered byte in the most significant position. Byte 0 of the memory system is therefore connected to data lines 7 through 0.

3.3 Bus System

3.3.1 General Description

Two levels of bus hierarchy are employed in constructing the Micro-Controller Unit Subsystem of MT6218B. As depicted in **Figure 5**, AHB Bus and APB Bus serve for system backbone and peripheral buses, while an APB bridge connects these two buses. Both AHB and APB Buses operate at the same clock rate as processor core.

The APB Bridge is the only bus master resided on the APB bus. All APB slaves are mapped onto memory block MB8 in MCU 32-bit addressing space. A central address decoder is implemented inside the bridge to generate those select signals

for individual peripheral. In addition, since the base address of each APB slave has been associated with select signals, the address bus on APB will contains only the value of offset address.

The maximum address space that can be allocated to a single APB slave is 32KB, i.e. 16-bit address lines. The width of data bus is mainly constrained to 16-bit to minimize the design complexity and power consumption while some of them uses 32-bit data bus to accommodate more bandwidth. In the case where an APB slave needs large amount of transfers, the device driver can also request a DMA resource or channel to conduct a burst of data transfer. The base address and data width of each peripheral are listed in **Table 5**.

Base Address	Description	Data Width	Software Base ID
8000_0000h	Configuration Registers (Clock, Power Down, Version and Reset)	16	CONFG Base
8001_0000h	External Memory Interface	16	EMI Base
8002_0000h	Interrupt Controller	32	CIRQ Base
8003_0000h	DMA Controller	32	DMA Base
8004_0000h	Reset Generation Unit	16	RGU Base
8005_0000h	Reserved		
8006_0000h	GPRS Cipher Unit	32	GCU Base
8007_0000h	Software Debug	16	SWDBG Base
8008_0000h	MCU Tracer	32	TRC Base
8009_0000h	NAND Flash Interface	32	NFI base
8010_0000h	General Purpose Timer	16	GPT Base
8011_0000h	Keypad Scanner	16	KP Base
8012_0000h	General Purpose Inputs/Outputs	16	GPIO Base
8013_0000h	UART 1	16	UART1 Base
8014_0000h	SIM Interface	16	SIM Base
8015_0000h	Pulse-Width Modulation Outputs	16	PWM Base
8016_0000h	Alerter Interface	16	ALTER Base
8017_0000h	LCD Interface	16	LCD Base
8018_0000h	UART 2	16	UART2 Base
8019_0000h	Reserved		
801a_0000h	IrDA	16	IRDA Base
801b_0000h	UART 3	16	UART3 Base
801c_0000h	Base-Band to PMIC Serial Interface	16	B2PSI Base
8020_0000h	TDMA Timer	16	TDMA Base
8021_0000h	Real Time Clock	16	RTC Base
8022_0000h	Base-Band Serial Interface	32	BSI Base
8023_0000h	Base-Band Parallel Interface	16	BPI Base
8024_0000h	Automatic Frequency Control Unit	16	AFC Base
8025_0000h	Automatic Power Control Unit	32	APC Base
8026_0000h	Frame Check Sequence	16	FCS Base

MediaTek Inc. Confidential

8027_0000h	Auxiliary ADC Unit	16	AUXADC Base
8028_0000h	Divider/Modulus Coprocessor	32	DIVIDER Base
8029_0000h	CSD Format Conversion Coprocessor	32	CSD_ACC Base
802a_0000h	MS/SD Controller	32	MSDC Base
8030_0000h	MCU-DSP Shared Register	16	SHARE Base
8031_0000h	DSP Patch Unit	16	PATCH Base
8040_0000h	Audio Front End	16	AFE Base
8041_0000h	Base-Band Front End	16	BFE Base
8050_0000h	Analog Chip Interface Controller	16	MIXED Base
8060_0000h	JPEG Decoder	32	JPEG Base
8061_0000h	Resizer	32	RESZ Base

Table 5 Register Base Addresses for MCU Peripherals

REGISTER ADDRESS	REGISTER NAME	SYNONYM
CONFG + 0000h	Hardware Version Register	HW_VER
CONFG + 0004h	Firmware Version Register	FW_VER
CONFG + 0008h	Hardware Code Register	HW_CODE
CONFG + 0404h	APB Bus Control Register	APB_CON

Table 6 APB Bridge Register Map

3.3.2 Register Definitions

CONFG+0000h Hardware Version Register HW_VERSION

Bit	15	14	13	12	11	10	9	8	7	6	5	4	3	2	1	0
Name	EXTP				MAJREV				MINREV				HFIX			
Type	RO				RO				RO				RO			
Reset	8				B				0				0			

This register is useful for software program to determine the hardware version of the chip. It will have a new value whenever each metal fix or major step is performed. All these values are incremented by a step of 1.

HFIX Iteration to fix a hardware bug, in case of some layer mask fixed

MINREV Minor Revision of the chip, in case of all layer masks changed

MAJREV Major Revision of the chip

EXTP This field shows the existence of Hardware Code Register that presents the Hardware ID while the value is other than zero.

CONFG+0004h Firmware Version Register FW_VERSION

Bit	15	14	13	12	11	10	9	8	7	6	5	4	3	2	1	0
Name	EXTP				MAJREV				MINREV				FFIX			
Type	RO				RO				RO				RO			
Reset	8				B				0				0			

This register is useful for software program to determine the Firmware ROM version that is included in this chip. All these values are incremented by a step of 1.

FFIX Iteration to fix a firmware bug

MINREV Minor Revision of the firmware

MAJREV Major Revision of the firmware

EXTP This field shows the existence of Hardware Code Register that presents the Hardware ID when the value is other than zero.

CONFG+0008h Hardware Code Register HW_CODE

Bit	15	14	13	12	11	10	9	8	7	6	5	4	3	2	1	0
Name	CODE3				CODE2				CODE1				CODE0			
Type	RO				RO				RO				RO			
Reset	6				2				1				8			

This register presents the Hardware ID.

CODE This version of chip is coded as 6218h.

CONFG+0404h APB Bus Control Register APB_CON

Bit	15	14	13	12	11	10	9	8	7	6	5	4	3	2	1	0
Name		APBW6		APBW4	APBW3	APBW2	APBW1	APBW0		APBR6		APBR4	APBR3	APBR2	APBR1	APBR0
Type		R/W		R/W	R/W	R/W	R/W	R/W		R/W		R/W	R/W	R/W	R/W	R/W
Reset		0		0	0	0	0	0		1		1	1	1	1	1

This register is used to control the timing of Read Cycle and Write Cycle on APB Bus. Note that APB Bridge 5 is different from other bridges. The access time is varied, and access is not completed until acknowledge signal from APB slave is asserted.

APBR0-APBR6 Read Access Time on APB Bus

- **0** 1-Cycle Access
- **1** 2-Cycle Access

APBW0-APBW6 Write Access Time on APB Bus

- **0** 1-Cycle Access
- **1** 2-Cycle Access

3.4 Direct Memory Access

3.4.1 General Description

A generic DMA Controller is placed on Layer 2 AHB Bus to support fast data transfers, and also to off-load the processor. With this controller, specific devices on AHB or APB buses can benefit greatly from quickly completing data movement from or to memory module, i.e. Internal System RAM or External SRAM. Such Generic DMA Controller can also be used to connect any two devices other than memory module as long as they can be addressed in memory space.

MediaTek Inc. Confidential

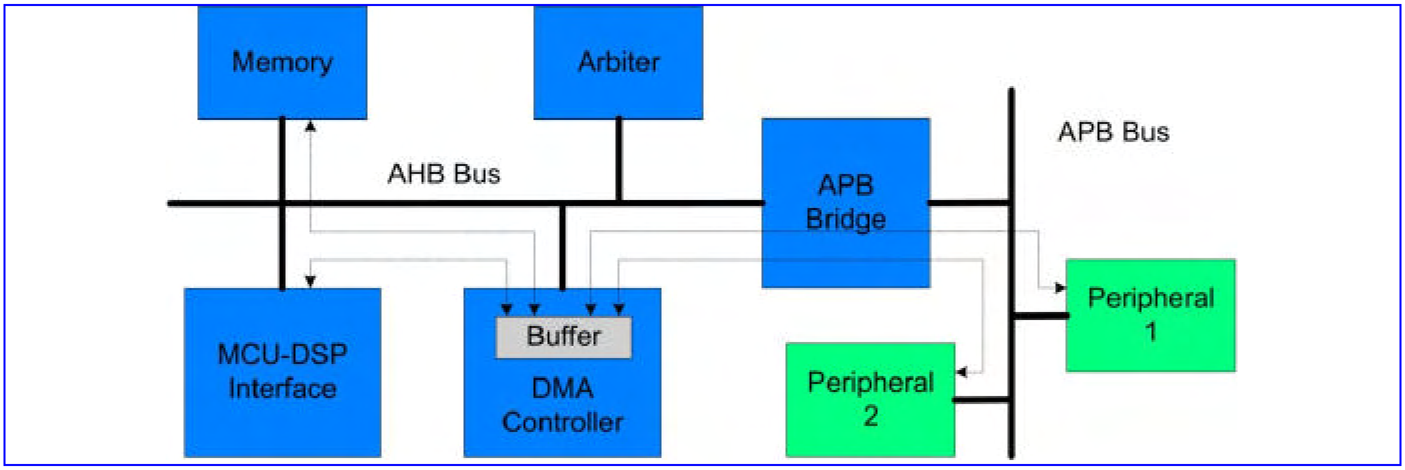

Figure 8 Variety Data Paths of DMA Transfers

Thirteen channels of data transfer are supported at one time. Each channel has a similar set of registers to be configured to different scheme as desired. If more than thirteen devices are requesting the DMA resources at the same time, software based arbitration should be employed. Once the service candidate is decided, the responsible device driver should configure the Generic DMA Controller properly in order to conduct DMA transfers. Both Interrupt and Polling based schemes in handling the completion event are supported. The block diagram of such generic DMA Controller is illustrated in **Figure 9**.

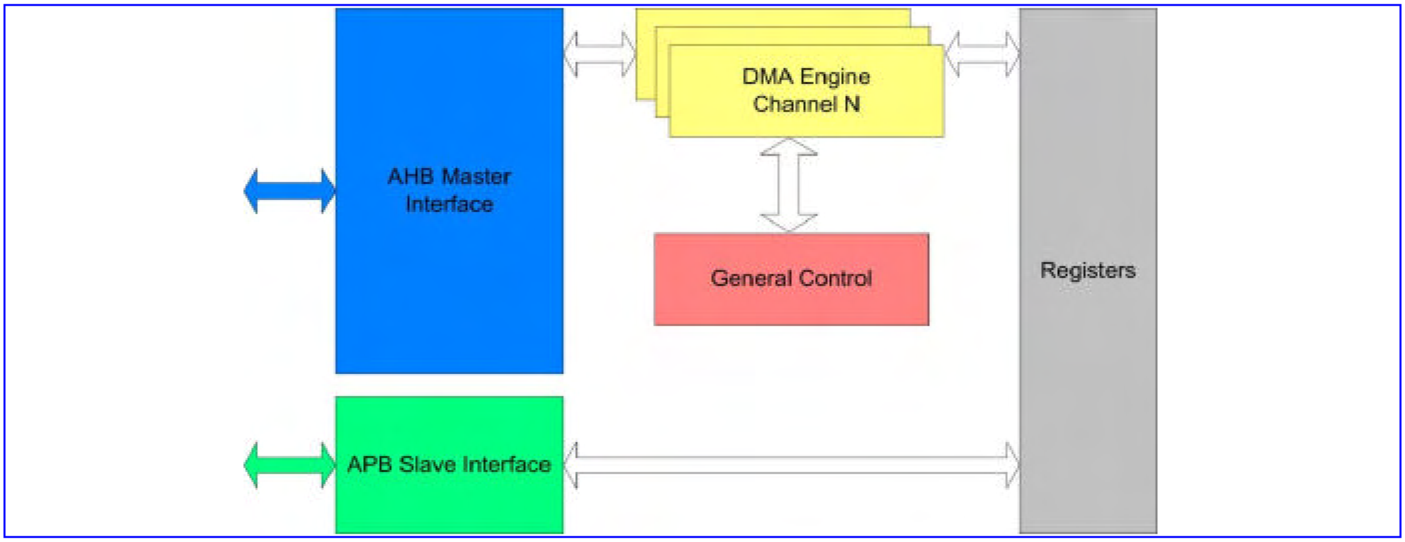

Figure 9 Block Diagram of Direct memory Access Module

3.4.1.1 Full-Size & Half-Size DMA Channels

There are two types of DMA channels in the DMA controller. The first one is called full-size DMA channel, and the second one is called half-size DMA channel. Channel 1 to 3 are full-size DMA channels, and channel 4 to 9 are half-size ones. The difference between the two types of DMA channels is that both source and destination address are programmable in full-size DMA channels, but only one side of address can be programmed in half-size DMA channel. This can be source or destination address. The addresses of the other sides are preset. Which preset address is used depends on the setting of MAS in DMA Channel Control Register. See the section of Register Definition for the detail.

3.4.1.2 Ring Buffer & Double Buffer Memory Data Movement

DMA channel 1-9 support ring-buffer and double-buffer memory data movement. This can be achieved by programming DMA_WPPT and DMA_WPTO, as well as set WPEN in DMA_CON register enable. **Figure 10** illustrates how this function works. Once transfer counter reaches the value of WPPT, next address will jump to WPTO address after completing data transfer of WPPT. Note that there is only one side can be configured as ring-buffer or two-buffer memory, and this is controlled by WPSD in DMA_CON register.

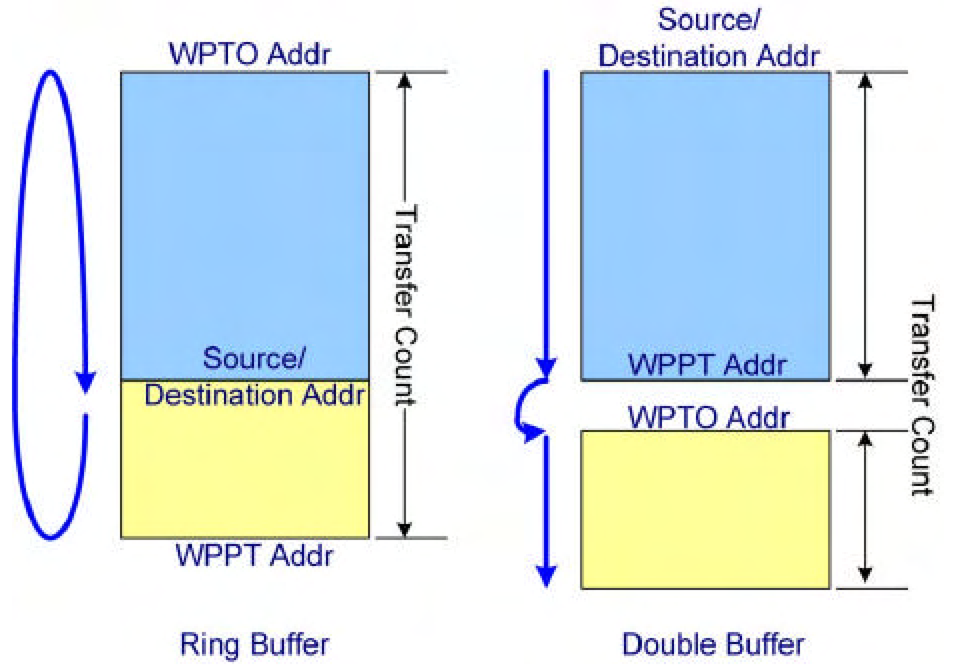

Figure 10 Ring Buffer and double Buffer Memory Data Movement

3.4.1.3 Unaligned Word Access

The address of word access on AHB bus must be aligned to word boundary, or the 2 LSB will be truncated to 00b. If programmers don't notice that, it may cause incorrect data fetch. For the case of moving data from unaligned addresses to aligned addresses, it's usually done by splitting the word into four bytes, and moves it by byte. This cause four read and four write transfers on bus. To improve bus efficiency, unaligned-word access is provided in DMA 4-9.

While this function is enable. DMAs move data from unaligned address to aligned address by executing four continuous byte-read access and one word-write access, and vice versa. This reduces three transfers on bus.

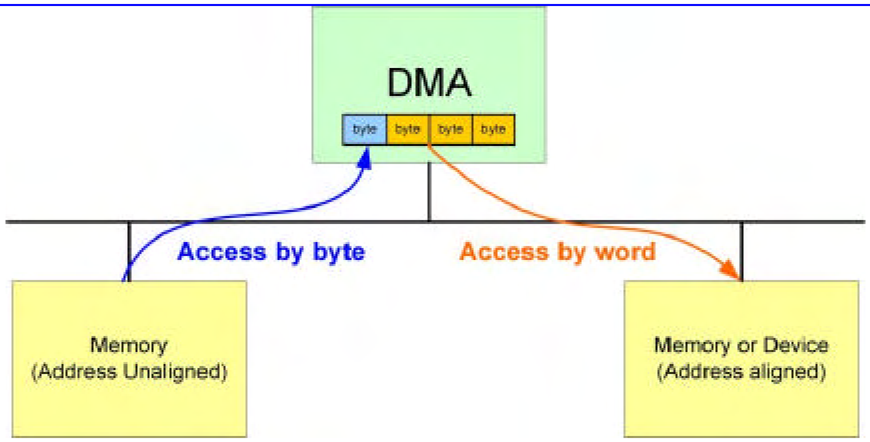

Figure 11 unaligned word accesses

3.4.1.4 Virtual FIFO DMA

Virtual FIFO DMA is used to ease UART control. The difference between the Virtual FIFO DMAs and the ordinary DMAs is additional FIFO controller is designed in DMA. The read and write pointer are kept in Virtual FIFO DMA. Once READ to this FIFO occurs, the read pointer will points to the address of the next data. On the contrary, the write pointer move to the next address while Write to this FIFO occurs. If FIFO is empty, a FIFO read will not be allowed. In the same way, data won't be written into FIFO if FIFO is full. For the reason of the requirement of UART flow control, an alert length shall be programmed. Once the FIFO Space is less than this value. An alert signal will issue to enable UART flow control. What kinds of flow control will be taken is depend on the setting in UART.

Each Virtual FIFO DMA can be programmed as RX or TX FIFO. This depends on the setting of DIR in DMA_CON register. If DIR is "0"(READ), it means TX FIFO. On the contrary, if DIR is "1"(WRITE), the Virtual FIFO DMA is specified as a RX FIFO.

Virtual FIFO DMA provides an interrupt to MCU. This interrupt is to inform MCU that there are data in the FIFO, and the amount of data is over or under the value defined in DMA_COUNT register. With this, MCU doesn't need to poll DMA to know when it needs to remove the data from FIFO or put data into FIFO.

Note that Virtual FIFO DMAs can't be used as generic DMAs, i.e. DMA1-9.

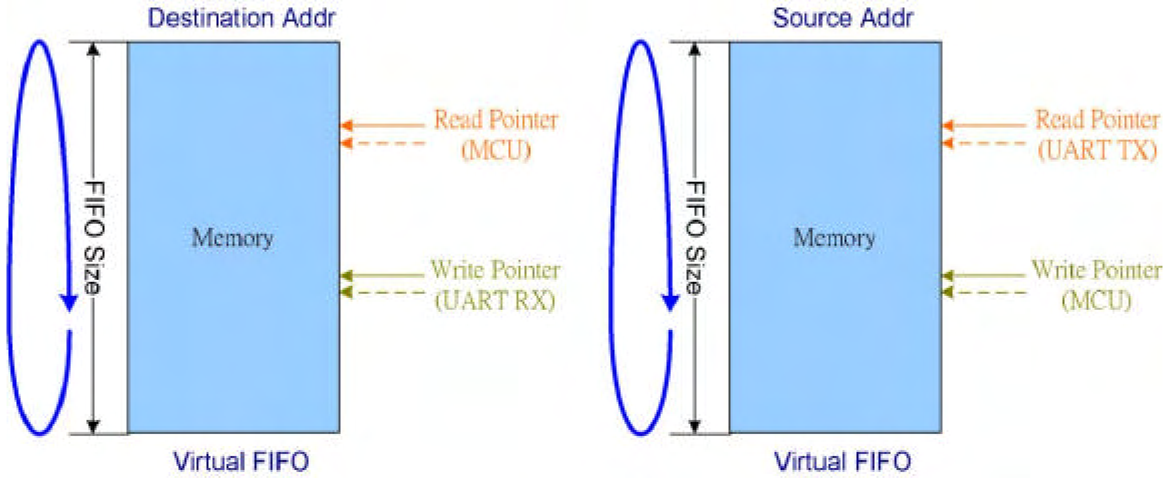

Figure 12 Virtual FIFO DMA

DMA number	Address of Virtual FIFO Access Port	Associated UART
DMA10	7800_0000h	UART1 RX / ALL UART TX
DMA11	7800_0100h	UART2 RX / ALL UART TX
DMA12	7800_0200h	UART3 RX / ALL UART TX
DMA13	7800_0300h	ALL UART TX

Table 7 Virtual FIFO Access Port

DMA number	Type	Ring Buffer	Two Buffer	Burst Mode	Unaligned Word Access
DMA1	Full Size	?	?	?	
DMA2	Full Size	?	?	?	
DMA3	Full Size	?	?	?	
DMA4	Half Size	?	?	?	?
DMA5	Half Size	?	?	?	?
DMA6	Half Size	?	?	?	?
DMA7	Half Size	?	?	?	?
DMA8	Half Size	?	?	?	?
DMA9	Half Size	?	?	?	?
DMA10	Virtual FIFO	?			
DMA11	Virtual FIFO	?			
DMA12	Virtual FIFO	?			
DMA13	Virtual FIFO	?			

Table 8 Function list of DMA channels

REGISTER ADDRESS	REGISTER NAME	SYNONYM
DMA + 0000h	DMA Global Status Register	DMA_GLBSTA
DMA + 0100h	DMA Channel 1 Source Address Register	DMA1_SRC
DMA + 0104h	DMA Channel 1 Destination Address Register	DMA1_DST
DMA + 0108h	DMA Channel 1 Wrap Point Address Register	DMA1_WPPT
DMA + 010Ch	DMA Channel 1 Wrap To Address Register	DMA1_WPTO
DMA + 0110h	DMA Channel 1 Transfer Count Register	DMA1_COUNT
DMA+ 0114h	DMA Channel 1 Control Register	DMA1_CON
DMA + 0118h	DMA Channel 1 Start Register	DMA1_START
DMA + 011Ch	DMA Channel 1 Interrupt Status Register	DMA1_INTSTA
DMA + 0120h	DMA Channel 1 Interrupt Acknowledge Register	DMA1_ACKINT
DMA + 0124h	DMA Channel 1 Remaining Length of Current Transfer	DMA1_RLCT
DMA + 0128h	DMA Channel 1 Bandwidth Limiter Register	DMA1_LIMITER
DMA + 0200h	DMA Channel 2 Source Address Register	DMA2_SRC
DMA + 0204h	DMA Channel 2 Destination Address Register	DMA2_DST
DMA + 0208h	DMA Channel 2 Wrap Point Address Register	DMA2_WPPT

DMA + 020Ch	DMA Channel 2 Wrap To Address Register	DMA2_WPTO
DMA + 0210h	DMA Channel 2 Transfer Count Register	DMA2_COUNT
DMA + 0214h	DMA Channel 2 Control Register	DMA2_CON
DMA + 0218h	DMA Channel 2 Start Register	DMA2_START
DMA + 021Ch	DMA Channel 2 Interrupt Status Register	DMA2_INTSTA
DMA + 0220h	DMA Channel 2 Interrupt Acknowledge Register	DMA2_ACKINT
DMA + 0224h	DMA Channel 2 Remaining Length of Current Transfer	DMA2_RLCT
DMA + 0228h	DMA Channel 2 Bandwidth Limiter Register	DMA2_LIMITER
DMA + 0300h	DMA Channel 3 Source Address Register	DMA3_SRC
DMA + 0304h	DMA Channel 3 Destination Address Register	DMA3_DST
DMA + 0308h	DMA Channel 3 Wrap Point Address Register	DMA3_WPPT
DMA + 030Ch	DMA Channel 3 Wrap To Address Register	DMA3_WPTO
DMA + 0310h	DMA Channel 3 Transfer Count Register	DMA3_COUNT
DMA + 0314h	DMA Channel 3 Control Register	DMA3_CON
DMA + 0318h	DMA Channel 3 Start Register	DMA3_START
DMA + 031Ch	DMA Channel 3 Interrupt Status Register	DMA3_INTSTA
DMA + 0320h	DMA Channel 3 Interrupt Acknowledge Register	DMA3_ACKINT
DMA + 0324h	DMA Channel 3 Remaining Length of Current Transfer	DMA3_RLCT
DMA + 0328h	DMA Channel 3 Bandwidth Limiter Register	DMA3_LIMITER
DMA + 0408h	DMA Channel 4 Wrap Point Address Register	DMA4_WPPT
DMA + 040Ch	DMA Channel 4 Wrap To Address Register	DMA4_WPTO
DMA + 0410h	DMA Channel 4 Transfer Count Register	DMA4_COUNT
DMA + 0414h	DMA Channel 4 Control Register	DMA4_CON
DMA + 0418h	DMA Channel 4 Start Register	DMA4_START
DMA + 041Ch	DMA Channel 4 Interrupt Status Register	DMA4_INTSTA
DMA + 0420h	DMA Channel 4 Interrupt Acknowledge Register	DMA4_ACKINT
DMA + 0424h	DMA Channel 4 Remaining Length of Current Transfer	DMA4_RLCT
DMA + 0428h	DMA Channel 4 Bandwidth Limiter Register	DMA4_LIMITER
DMA + 042Ch	DMA Channel 4 Programmable Address Register	DMA4_PGMADDR
DMA + 0508h	DMA Channel 5 Wrap Point Address Register	DMA5_WPPT
DMA + 050Ch	DMA Channel 5 Wrap To Address Register	DMA5_WPTO
DMA + 0510h	DMA Channel 5 Transfer Count Register	DMA5_COUNT
DMA + 0514h	DMA Channel 5 Control Register	DMA5_CON
DMA + 0518h	DMA Channel 5 Start Register	DMA5_START
DMA + 051Ch	DMA Channel 5 Interrupt Status Register	DMA5_INTSTA
DMA + 0520h	DMA Channel 5 Interrupt Acknowledge Register	DMA5_ACKINT
DMA + 0524h	DMA Channel 5 Remaining Length of Current Transfer	DMA5_RLCT
DMA + 0528h	DMA Channel 5 Bandwidth Limiter Register	DMA5_LIMITER
DMA + 052Ch	DMA Channel 5 Programmable Address Register	DMA5_PGMADDR

DMA + 0608h	DMA Channel 6 Wrap Point Address Register	DMA6_WPPT
DMA + 060Ch	DMA Channel 6 Wrap To Address Register	DMA6_WPTO
DMA + 0610h	DMA Channel 6 Transfer Count Register	DMA6_COUNT
DMA + 0614h	DMA Channel 6 Control Register	DMA6_CON
DMA + 0618h	DMA Channel 6 Start Register	DMA6_START
DMA + 061Ch	DMA Channel 6 Interrupt Status Register	DMA6_INTSTA
DMA + 0620h	DMA Channel 6 Interrupt Acknowledge Register	DMA6_ACKINT
DMA + 0624h	DMA Channel 6 Remaining Length of Current Transfer	DMA6_RLCT
DMA + 0628h	DMA Channel 6 Bandwidth Limiter Register	DMA6_LIMITER
DMA + 062Ch	DMA Channel 6 Programmable Address Register	DMA6_PGMADDR
DMA + 0708h	DMA Channel 7 Wrap Point Address Register	DMA7_WPPT
DMA + 070Ch	DMA Channel 7 Wrap To Address Register	DMA7_WPTO
DMA + 0710h	DMA Channel 7 Transfer Count Register	DMA7_COUNT
DMA + 0714h	DMA Channel 7 Control Register	DMA7_CON
DMA + 0718h	DMA Channel 7 Start Register	DMA7_START
DMA + 071Ch	DMA Channel 7 Interrupt Status Register	DMA7_INTSTA
DMA + 0720h	DMA Channel 7 Interrupt Acknowledge Register	DMA7_ACKINT
DMA + 0724h	DMA Channel 7 Remaining Length of Current Transfer	DMA7_RLCT
DMA + 0728h	DMA Channel 7 Bandwidth Limiter Register	DMA7_LIMITER
DMA + 072Ch	DMA Channel 7 Programmable Address Register	DMA7_PGMADDR
DMA + 0808h	DMA Channel 8 Wrap Point Address Register	DMA8_WPPT
DMA + 080Ch	DMA Channel 8 Wrap To Address Register	DMA8_WPTO
DMA + 0810h	DMA Channel 8 Transfer Count Register	DMA8_COUNT
DMA + 0814h	DMA Channel 8 Control Register	DMA8_CON
DMA + 0818h	DMA Channel 8 Start Register	DMA8_START
DMA + 081Ch	DMA Channel 8 Interrupt Status Register	DMA8_INTSTA
DMA + 0820h	DMA Channel 8 Interrupt Acknowledge Register	DMA8_ACKINT
DMA + 0824h	DMA Channel 8 Remaining Length of Current Transfer	DMA8_RLCT
DMA + 0828h	DMA Channel 8 Bandwidth Limiter Register	DMA8_LIMITER
DMA + 082Ch	DMA Channel 8 Programmable Address Register	DMA8_PGMADDR
DMA + 0908h	DMA Channel 9 Wrap Point Address Register	DMA9_WPPT
DMA + 090Ch	DMA Channel 9 Wrap To Address Register	DMA9_WPTO
DMA + 0910h	DMA Channel 9 Transfer Count Register	DMA9_COUNT
DMA + 0914h	DMA Channel 9 Control Register	DMA9_CON
DMA + 0918h	DMA Channel 9 Start Register	DMA9_START
DMA + 091Ch	DMA Channel 9 Interrupt Status Register	DMA9_INTSTA
DMA + 0920h	DMA Channel 9 Interrupt Acknowledge Register	DMA9_ACKINT
DMA + 0924h	DMA Channel 9 Remaining Length of Current Transfer	DMA9_RLCT
DMA + 0928h	DMA Channel 9 Bandwidth Limiter Register	DMA9_LIMITER

MediaTek Inc. Confidential

DMA + 092Ch	DMA Channel 9 Programmable Address Register	DMA9_PGMADDR
DMA + 0A10h	DMA Channel 10 Transfer Count Register	DMA10_COUNT
DMA + 0A14h	DMA Channel 10 Control Register	DMA10_CON
DMA + 0A18h	DMA Channel 10 Start Register	DMA10_START
DMA + 0A1Ch	DMA Channel 10 Interrupt Status Register	DMA10_INTSTA
DMA + 0A20h	DMA Channel 10 Interrupt Acknowledge Register	DMA10_ACKINT
DMA + 0A28h	DMA Channel 10 Bandwidth Limiter Register	DMA10_LIMITER
DMA + 0A2Ch	DMA Channel 10 Programmable Address Register	DMA10_PGMADDR
DMA + 0A30h	DMA Channel 10 Write Pointer	DMA10_WRPTR
DMA + 0A34h	DMA Channel 10 Read Pointer	DMA10_RDPTR
DMA + 0A38h	DMA Channel 10 FIFO Count	DMA10_FFCNT
DMA + 0A3Ch	DMA Channel 10 FIFO Status	DMA10_FFSTA
DMA + 0A40h	DMA Channel 10 Alert Length	DMA10_ALTLEN
DMA + 0A44h	DMA Channel 10 FIFO Size	DMA10_FFSIZE
DMA + 0B10h	DMA Channel 11 Transfer Count Register	DMA11_COUNT
DMA + 0B14h	DMA Channel 11 Control Register	DMA11_CON
DMA + 0B18h	DMA Channel 11 Start Register	DMA11_START
DMA + 0B1Ch	DMA Channel 11 Interrupt Status Register	DMA11_INTSTA
DMA + 0B20h	DMA Channel 11 Interrupt Acknowledge Register	DMA11_ACKINT
DMA + 0B28h	DMA Channel 11 Bandwidth Limiter Register	DMA11_LIMITER
DMA + 0B2Ch	DMA Channel 11 Programmable Address Register	DMA11_PGMADDR
DMA + 0B30h	DMA Channel 11 Write Pointer	DMA11_WRPTR
DMA + 0B34h	DMA Channel 11 Read Pointer	DMA11_RDPTR
DMA + 0B38h	DMA Channel 11 FIFO Count	DMA11_FFCNT
DMA + 0B3Ch	DMA Channel 11 FIFO Status	DMA11_FFSTA
DMA + 0B40h	DMA Channel 11 Alert Length	DMA11_ALTLEN
DMA + 0B44h	DMA Channel 11 FIFO Size	DMA11_FFSIZE
DMA + 0C10h	DMA Channel 12 Transfer Count Register	DMA12_COUNT
DMA + 0C14h	DMA Channel 12 Control Register	DMA12_CON
DMA + 0C18h	DMA Channel 12 Start Register	DMA12_START
DMA + 0C1Ch	DMA Channel 12 Interrupt Status Register	DMA12_INTSTA
DMA + 0C20h	DMA Channel 12 Interrupt Acknowledge Register	DMA12_ACKINT
DMA + 0C28h	DMA Channel 12 Bandwidth Limiter Register	DMA12_LIMITER
DMA + 0C2Ch	DMA Channel 12 Programmable Address Register	DMA12_PGMADDR
DMA + 0C30h	DMA Channel 12 Write Pointer	DMA12_WRPTR
DMA + 0C34h	DMA Channel 12 Read Pointer	DMA12_RDPTR
DMA + 0C38h	DMA Channel 12 FIFO Count	DMA12_FFCNT
DMA + 0C3Ch	DMA Channel 12 FIFO Status	DMA12_FFSTA
DMA + 0C40h	DMA Channel 12 Alert Length	DMA12_ALTLEN

MediaTek Inc. Confidential

DMA + 0C44h	DMA Channel 12 FIFO Size	DMA12_FFSIZE
DMA + 0D10h	DMA Channel 13 Transfer Count Register	DMA13_COUNT
DMA + 0D14h	DMA Channel 13 Control Register	DMA13_CON
DMA + 0D18h	DMA Channel 13 Start Register	DMA13_START
DMA + 0D1Ch	DMA Channel 13 Interrupt Status Register	DMA13_INTSTA
DMA + 0D20h	DMA Channel 13 Interrupt Acknowledge Register	DMA13_ACKINT
DMA + 0D28h	DMA Channel 13 Bandwidth Limiter Register	DMA13_LIMITER
DMA + 0D2Ch	DMA Channel 13 Programmable Address Register	DMA13_PGMADDR
DMA + 0D30h	DMA Channel 13 Write Pointer	DMA13_WRPTR
DMA + 0D34h	DMA Channel 13 Read Pointer	DMA13_RDPTR
DMA + 0D38h	DMA Channel 13 FIFO Count	DMA13_FFCNT
DMA + 0D3Ch	DMA Channel 13 FIFO Status	DMA13_FFSTA
DMA + 0D40h	DMA Channel 13 Alert Length	DMA13_ALTLEN
DMA + 0D44h	DMA Channel 13 FIFO Size	DMA13_FFSIZE

Table 9 DMA Controller Register Map

3.4.2 Register Definitions

Registers programming tips,

- Start registers shall be cleared, when associated channels are being programmed.
- PGMADDR, i.e. programmable address, only exists in half-size DMA channels. If DIR in Control Register is high, PGMADDR represents Destination Address. On the contrary, it represents Source Address.
- Functions of ring-buffer & double-buffer memory data movement can be activated in either source side or destination side by programming DMA_WPPT & and DMA_WPTO, as well as setting WPEN in DMA_CON register high. WPSD in DMA_CON register determines the activated side.

DMA+0000h DMA Global Status Register DMA_GLBSTA

Bit	31	30	29	28	27	26	25	24	23	22	21	20	19	18	17	16
Name							IT13	RUN13	IT12	RUN12	IT11	RUN11	IT10	RUN10	IT9	RUN9
Type							RO	RO	RO	RO	RO	RO	RO	RO	RO	RO
Reset							0	0	0	0	0	0	0	0	0	0
Bit	**15**	**14**	**13**	**12**	**11**	**10**	**9**	**8**	**7**	**6**	**5**	**4**	**3**	**2**	**1**	**0**
Name	IT8	RUN8	IT7	RUN7	IT6	RUN6	IT5	RUN5	IT4	RUN4	IT3	RUN3	IT2	RUN2	IT1	RUN1
Type	RO	RO	RO	RO	RO	RO	RO	RO	RO	RO	RO	RO	RO	RO	RO	RO
Reset	0	0	0	0	0	0	0	0	0	0	0	0	0	0	0	0

This register helps software program being well aware of the global status of DMA channels.

RUN_N DMA channel n status

0 Channel n is stopped or has completed the transfer already.

1 Channel n is currently running.

IT_N Interrupt status for channel n

0 No interrupt is generated.

1 An interrupt is pending and waiting for service.

DMA+0n00h DMA Channel n Source Address Register DMAn_SRC

Bit	31	30	29	28	27	26	25	24	23	22	21	20	19	18	17	16
Name	SRC[31:16]															
Type	R/W															
Reset	0															
Bit	15	14	13	12	11	10	9	8	7	6	5	4	3	2	1	0
Name	SRC[15:0]															
Type	R/W															
Reset	0															

The above registers are to prompt the base or current address that a DMA channel is dealing with currently. In regard to a write to this register, it specifies the base address of transfer source for a DMA channel. Before being able to program these registers, the software program should be sure of that STR in DMAn_START is set to ‘0’, that is the DMA channel is stopped and disabled completely. Other wise, the DMA channel may run out of order. In regard to a read to this set, it shows the value exactly the same as the one being written while SINC in DMAn_CON is set to “0”. With SINC being set to “1”, it appears the current source address that the data being getting from. It allows software program being well tracking the progress of DMA transfer.

Note that n is from 1 to 3.

SRC **SRC**[31:0] specifies the base or current address of transfer source for a DMA channel, i.e. channel 1, 2 or 3

WRITE base address of transfer source

READ base address of transfer source if SINC in DMAn_CON is “0”

current address of transfer source if SINC in DMAn_CON is “1”

DMA+0n04h DMA Channel n Destination Address Register DMAn_DST

Bit	31	30	29	28	27	26	25	24	23	22	21	20	19	18	17	16
Name	DST[31:16]															
Type	R/W															
Reset	0															
Bit	15	14	13	12	11	10	9	8	7	6	5	4	3	2	1	0
Name	DST[15:0]															
Type	R/W															
Reset	0															

The above registers are to index the base or current address that a DMA channel is dealing with currently. In regard to a write to this set, it specifies the base address of the transfer destination for a DMA channel. Before being able to program these register, the software should be sure of that STR in DMAn_START is set to ‘0’, that is the DMA channel is stopped and disabled completely. Other wise, the DMA channel may run out of order. In regard to a read to this set, it shows the value exactly the same as the one being written while DINC in DMAn_CON is set to “0”. With DINC being set to “1”, it appears the current destination address that the data being sending to. It allows software program being well tracking the progress of DMA transfer.

Note that n is from 1 to 3.

DST **DST**[31:0] specifies the base or current address of transfer destination for a DMA channel, i.e. channel 1, 2 or 3.

WRITE base address of transfer destination

READ base address of transfer destination if DINC in DMAn_CON is “0”

current address of transfer destination if DINC in DMAn_CON is “1”

DMA+0n08h DMA Channel n Wrap Point Count Register DMAn_WPPT

Bit	31	30	29	28	27	26	25	24	23	22	21	20	19	18	17	16
Name																
Type																
Reset																
Bit	15	14	13	12	11	10	9	8	7	6	5	4	3	2	1	0
Name	WPPT[15:0]															
Type	R/W															
Reset	0															

The above registers are to specify the address of the jump point of a given DMA transfer to support ring buffer or double buffer style memory accesses. To enable this function, two control bit, WPEN and WPSD, in DMA control register should be programmed. See following register description for the detail. While address counter in DMA engine matchs this address, an address jump will occurs, and the next address will be the address specified in DMAn_WPTO. Before being able to program these register, the software should be sure of that STR in DMAn_START is set to ‘0’, that is the DMA channel is stopped and disabled completely. Other wise, the DMA channel may run out of order. To enable this function, WPEN in DMA_CON should be set.

Note that n is from 1 to 9.

WPPT **WPPT**[15:0] specifies the amount of the transfer count from start to jumping point for a DMA channel, i.e. channel 1 – 9.

WRITE the address of the jump point.

READ the same as what you fill in.

DMA+0n0Ch DMA Channel n Wrap To Address Register DMAn_WPTO

Bit	31	30	29	28	27	26	25	24	23	22	21	20	19	18	17	16
Name	WPTO[31:16]															
Type	R/W															
Reset	0															
Bit	15	14	13	12	11	10	9	8	7	6	5	4	3	2	1	0
Name	WPTO[15:0]															
Type	R/W															
Reset	0															

The above registers are to specify the address of the jump destination of a given DMA transfer to support ring buffer or double buffer style memory accesses. To enable this function, two control bit, WPEN and WPSD, in DMA control register should be programmed. See following register description for the detail. Before being able to program these register, the software should be sure of that STR in DMAn_START is set to ‘0’, that is the DMA channel is stopped and disabled completely. Other wise, the DMA channel may run out of order. To enable this function, WPEN in DMA_CON should be set.

Note that n is from 1 to 9.

WPTO **WPTO**[31:0] specifies the address of the jump point for a DMA channel, i.e. channel 1 – 11.

WRITE the address of the jump destination.

READ the same as what you fill in.

DMA+0n10h DMA Channel n Transfer Count Register DMAn_COUNT

Bit	31	30	29	28	27	26	25	24	23	22	21	20	19	18	17	16
Name																
Type																
Reset																
Bit	**15**	**14**	**13**	**12**	**11**	**10**	**9**	**8**	**7**	**6**	**5**	**4**	**3**	**2**	**1**	**0**
Name	LEN															
Type	R/W															
Reset	0															

This register specifies the amount of total transfer count that the DMA channel is required to perform. Upon completion, the DMA channel generates an interrupt request to the processor while ITEN in DMAn_CON is set as '1'. Note that the total size of data being transferred by a DMA channel is determined by LEN together with the SIZE in DMAn_CON, i.e. LEN x SIZE.

For virtual FIFO DMA, this register is used to configure the RX threshold and TX threshold. Interrupt is triggered while FIFO count >= RX threshold in RX path or FIFO count =< TX threshold in TX path. Note that ITEN bit in DMA_CON register shall be set, or no interrupt will issue.

Note that n is from 1 to 13.

LEN The amount of total transfer count

DMA+0n14h DMA Channel n Control Register DMAn_CON

Bit	31	30	29	28	27	26	25	24	23	22	21	20	19	18	17	16
Name									MAS					DIR	WPEN	WPSD
Type									R/W					R/W	R/W	R/W
Reset									0					0	0	0
Bit	**15**	**14**	**13**	**12**	**11**	**10**	**9**	**8**	**7**	**6**	**5**	**4**	**3**	**2**	**1**	**0**
Name	ITEN					BURST					B2W	DRQ	DINC	SINC	SIZE	
Type	R/W					R/W					R/W	R/W	R/W	R/W	R/W	
Reset	0					0					0	0	0	0	0	

This register appeals all the available control schemes for a DMA channel that is ready for software programmer to configure with. Note that all these fields cannot be changed while DMA transfer is in progress or unexpected situation may occur.

Note that n is from 1 to 13.

SIZE Data size within the confine of a bus cycle per transfer

These bits confines the size to the specified value for individual bus cycle that data is moving between source and destination. The size is in terms of byte and has maximum value of 4 bytes. It is mainly decided by the data width of a DMA master.

- **00** Byte transfer/1 byte
- **01** Half-word transfer/2 bytes
- **10** Word transfer/4 bytes
- **11** Reserved

SINC Appearance control for the source address registers DMAn_MSBSRC and DMAn_LSBSRC

- **0** The base address of the source
- **1** The current address of the source that the DMA channel is currently dealing with.

DINC Appearance control for the destination address registers DMAn_MSBDST and DMAn_LSBDST

0 The base address of the des tination

1 The current address of the destination that the DMA channel is currently dealing with

DREQ Throttle and handshake control for DMA transfer

0 No throttle control during DMA transfer or transfers occurred only between memories

1 Hardware handshake management

The DMA master is able to throttle down the transfer rate by way of request-grant handshake.

B2W Word to Byte or Byte to Word transfer for the applications of transferring non-word-aligned-address data to word-aligned-address data. Note that BURST shall be set to 4-beat/8-beat/16 -beat burst while enabling this function, and the SIZE shall be set to Byte.

NO effect on channel 1 – 3 & 10 - 13.

0 Disable

1 Enable

BURST Transfer Type. Burst-type transfers have better bus efficiency. Massy data movement is recommended to use this kind of transfer. But note that burst-type transfer won' t stop until all of the beats are completed or transfer length is reached. FIFO threshold of peripherals shall be configured carefully while you use it to move data from/ to this peripheral.

What transfer type can be used is restricted by the SIZE. If SIZE is 00b, i.e. byte transfer, all of the four transfer types can be used. If SIZE is 01b, i.e. half-word transfer, 16-beat incrementing burst can' t be used. If SIZE is 10b, i.e. byte transfer, only single and 4-beat incrementing burst can be used.

NO effect on channel 10 - 13.

000 Single

001 Reserved

010 4-beat incrementing burst

011 Reserved

100 8-beat incrementing burst

101 Reserved

110 16-beat incrementing burst

111 Reserved

ITEN DMA transfer completion interrupt enable.

0 Disable

1 Enable

WPSD The side using wrap-addressing function. Only one side of a DMA channel can activate wrap-addressing function at a time.

NO effect on channel 10 - 13.

0 wrap-addressing on source

1 wrap-addressing on destination

WPEN Wrap addressing for ring buffer. The next address of DMA jumps to WRAP TO address while current address matches WRAP POINT address.

NO effect on channel 10 - 13.

0 Disable

1 Enable

DIR the directions of DMA transfer for half -size DMA channels, i.e. channel 4 – 11. The direction is from the viewpoint of DMA masters. WRITE means that reads from master and then writes to the address specified in DMA_PGMADDR. Vice versa.

NO effect on channel 1 - 3.

0 Read

1 Write

MAS Master selection. Specifying which master occupies this DMA channel. Once assigned to certain master, corresponding DREQ and DACK will be connected. In regard to half-size DMA channels, i.e. channel 4 – 11, a preset address will be assigned as well.

0000 SIM

0001 MSDC

0010 IrDA TX

0011 IrDA RX

0100 USB1 Write

0101 USB1 Read

0110 USB2 Write

0111 USB2 Read

1000 UART1 TX

1001 UART1 RX

1010 UART2 TX

1011 UART2 RX

1100 UART3 TX

1101 UART3 RX

1110 DDMA

1111 Reserved

DMA+0n18h DMA Channel n Start Register DMAn_START

Bit	31	30	29	28	27	26	25	24	23	22	21	20	19	18	17	16
Name																
Type																
Reset																
Bit	15	14	13	12	11	10	9	8	7	6	5	4	3	2	1	0
Name	STR															
Type	R/W															
Reset	0															

This register controls the activity of a DMA channel. Note that prior to set STR to "1", all the configurations should be done by giving proper value to the registers including DMAn_SRC, DMAn_DST, DMAn_PGMADDR, DMAn_COUNT and DMAn_CON. Note also that once the STR is set to "1", the hardware will not clear it automatically no matter the DMA channel accomplishes the DMA transfer or not. Put another way, the value of **STR** keeps as "1" in spite of the completion of DMA transfer. Therefore, the software program should be sure to clear **STR** to "0" before being able to re-start another DMA transfer.

Note that n is from 1 to 13.

STR Start control for a DMA channel

0 The DMA channel is stopped

1 The DMA channel is started and running

DMA+0n1Ch DMA Channel n Interrupt Status Register DMAn_INTSTA

Bit	31	30	29	28	27	26	25	24	23	22	21	20	19	18	17	16

Name																
Type																
Reset																
Bit	15	14	13	12	11	10	9	8	7	6	5	4	3	2	1	0
Name	**INT**															
Type	RO															
Reset	0															

This register shows the interrupt status of a DMA channel. In fact the value is exactly the same as in DMA_GLBSTA.

Note that n is from 1 to 13.

INT Interrupt Status for DMA Channel

- **0** No interrupt request is generated.
- **1** One interrupt request is pending and waiting for service

DMA+0n20h DMA Channel n Interrupt Acknowledge Register DMAn_ACKINT

Bit	31	30	29	28	27	26	25	24	23	22	21	20	19	18	17	16
Name																
Type																
Reset																
Bit	15	14	13	12	11	10	9	8	7	6	5	4	3	2	1	0
Name	**ACK**															
Type	WO															
Reset	0															

This register is used to acknowledge the current interrupt request associated with the completion event of a DMA channel by software program. Note that this is a write-only register, any read to it will return a value of “0”.

Note that n is from 1 to 13.

ACK Interrupt acknowledge for the DMA channel

- **0** No effect
- **1** Interrupt request is acknowledged and should be relinquished.

DMA+0n24h DMA Channel n Remaining Length of Current Transfer DMAn_RLCT

Bit	31	30	29	28	27	26	25	24	23	22	21	20	19	18	17	16
Name																
Type																
Reset																
Bit	15	14	13	12	11	10	9	8	7	6	5	4	3	2	1	0
Name	**RLCT**															
Type	RO															
Reset	0															

This register is to reflect the left amount of the transfer.

Note that n is from 1 to 9

DMA+0n28h DMA Bandwidth limiter Register DMAn_LIMITER

Bit	31	30	29	28	27	26	25	24	23	22	21	20	19	18	17	16
Name																
Type																
Reset																
Bit	15	14	13	12	11	10	9	8	7	6	5	4	3	2	1	0

Name									LIMITER
Type									R/W
Reset									0

This register is to suppress the Bus utilization of the DMA channel. The value is from 0 to 255. 0 means no limitation, and 255 means totally banned. The value between 0 and 255 means certain DMA can has permission to use AHB every (4 X n) AHB clock cycles.

Note that it's not recommended to limit the Bus utilization of the DMA channels because this will increase the latency of response to the masters, and the transfer rate will decrease as well. Before using it, programmer must make sure that masters have some protective mechanism to avoid going into wrong state.

Note that n is from 1 to 13.

LIMITER from 0 to 255. 0 means no limitation, 255 means totally banned, and others means Bus access permission every (4 X n) AHB clock.

DMA+0n2Ch DMA Channel n Programmable Address Register DMAn_PGMADDR

Bit	31	30	29	28	27	26	25	24	23	22	21	20	19	18	17	16
Name	PGMADDR[31:16]															
Type	R/W															
Reset	0															
Bit	15	14	13	12	11	10	9	8	7	6	5	4	3	2	1	0
Name	PGMADDR[15:0]															
Type	R/W															
Reset	0															

The above registers are to specify the address for a half-size DMA channel. This address represents source address if DIR in DMA_CON is set to 0, and on the contrary it represents destination address. Before being able to program these register, the software should be sure of that STR in DMAn_START is set to '0', that is the DMA channel is stopped and disabled completely. Other wise, the DMA channel may run out of order. To enable this function, a control bit in DMA control register should

Note that n is from 4 to 11.

PGMADDR **PGMADDR**[31:0] specifies the address for a half-size DMA channel, i.e. channel 4– 11.

WRITE the address of the jump destination.

READ base address of transfer destination if SINC/DINC in DMAn_CON is "0"
current address of transfer destination if SINC/DINC in DMAn_CON is "1"

DMA+0n30h DMA Channel n Virtual FIFO Write Pointer Register DMAn_WRPTR

Bit	31	30	29	28	27	26	25	24	23	22	21	20	19	18	17	16
Name	WRPTR[31:16]															
Type	RO															
Bit	15	14	13	12	11	10	9	8	7	6	5	4	3	2	1	0
Name	WRPTR[15:0]															
Type	RO															

Note that n is from 10 to 13.

WRPTR Virtual FIFO Write Pointer.

DMA+0n34h DMA Channel n Virtual FIFO Read Pointer Register DMAn_RDPTR

Bit	31	30	29	28	27	26	25	24	23	22	21	20	19	18	17	16
Name	RDPTR[31:16]															
Type	RO															
Bit	15	14	13	12	11	10	9	8	7	6	5	4	3	2	1	0
Name	RDPTR[15:0]															
Type	RO															

Note that n is from 10 to 13.

RDPTR Virtual FIFO Read Pointer.

DMA+0n38h DMA Channel n Virtual FIFO Data Count Register DMAn_FFCNT

Bit	31	30	29	28	27	26	25	24	23	22	21	20	19	18	17	16
Name																
Type																
Bit	15	14	13	12	11	10	9	8	7	6	5	4	3	2	1	0
Name	FFCNT															
Type	RO															

Note that n is from 10 to 13.

FFCNT To display the number of data stored in FIFO. 0 means FIFO empty, and FIFO is full if FFCNT is equal to FFSIZE.

DMA+0n3Ch DMA Channel n Virtual FIFO Status Register DMAn_FFSTA

Bit	31	30	29	28	27	26	25	24	23	22	21	20	19	18	17	16
Name																
Type																
Reset																
Bit	15	14	13	12	11	10	9	8	7	6	5	4	3	2	1	0
Name														ALT	EMPTY	FULL
Type														RO	RO	RO
Reset														0	1	0

Note that n is from 10 to 13.

FULL To indicate FIFO is full.

- **0** Not Full
- **1** Full

EMPTY To indicate FIFO is empty.

- **0** Not Empty
- **1** Empty

ALT To indicate FIFO Count is larger than ALTLEN. DMA will issue alert signal to UART to enable UART flow control.

- **0** Not reach alert region
- **1** Reach alert region.

DMA+0n40h DMA Channel n Virtual FIFO Alert Length Register DMAn_ALTLEN

Bit	31	30	29	28	27	26	25	24	23	22	21	20	19	18	17	16

Name																
Type																
Reset																
Bit	15	14	13	12	11	10	9	8	7	6	5	4	3	2	1	0
Name											ALTLEN					
Type											R/W					
Reset											0					

Note that n is from 10 to 13.

ALTLEN specifies the Alert Length of Virtual FIFO DMA. Once remaining FIFO space is less than ALTLEN, an alert signal will issued to UART to enable flow control. Normally, ALTLEN shall be larger than 16 for UART application.

DMA+0n44h DMA Channel n Virtual FIFO Size Register DMAn_FFSIZE

Bit	31	30	29	28	27	26	25	24	23	22	21	20	19	18	17	16
Name																
Type																
Reset																
Bit	15	14	13	12	11	10	9	8	7	6	5	4	3	2	1	0
Name	FFSIZE															
Type	R/W															
Reset	0															

Note that n is from 10 to 13.

FFSIZE specifies the FIFO Size of Virtual FIFO DMA.

3.5 Interrupt Controller

3.5.1 General Description

Figure 13 outlines the major functionality of the MCU Interrupt Controller. The interrupt controller processes all interrupt sources coming from external lines and internal MCU peripherals. Since ARM7EJ-S core supports two levels of interrupt latency, this controller will generate two request signals: FIQ for fast, low latency interrupt request and IRQ for more general interrupts with lower priority.

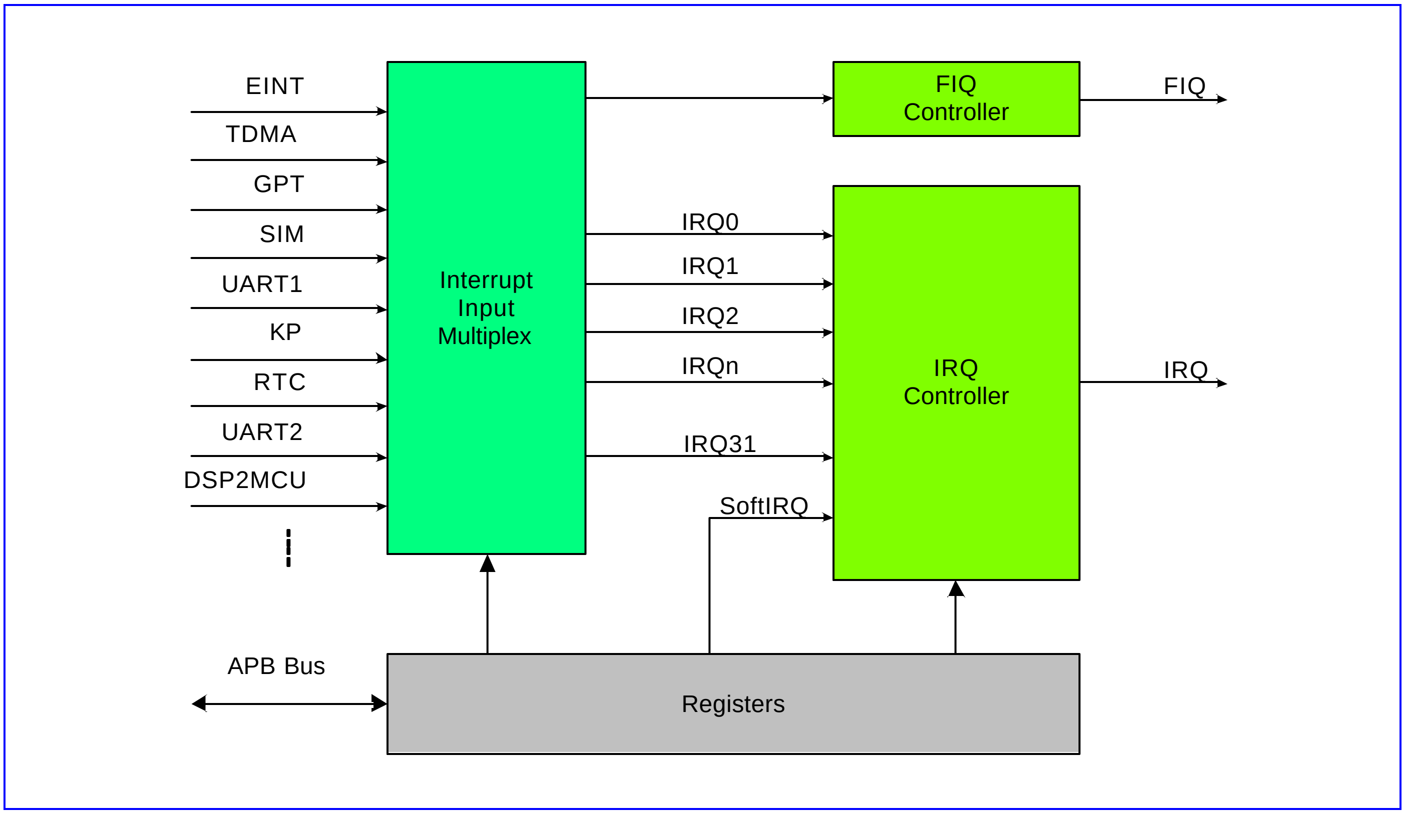

Figure 13 Block Diagram of the Interrupt Controller

One and only one of the interrupt sources can be assigned to FIQ Controller and have the highest priority in requesting timing critical service. All the others should share the same IRQ signal by connecting them to IRQ Controller. The IRQ Controller manages up 32 interrupt lines of IRQ0 to IRQ31 with fixed priority in descending order.

The Interrupt Controller provides a simple software interface by mean of registers to manipulate the interrupt request shared system. IRQ Selection Registers and FIQ Selection Register determine the source priority and connecting relation among sources and interrupt lines. IRQ Source Status Register allows software program to identify the source of interrupt that generates the interrupt request. IRQ Mask Register provides software to mask out undesired sources some time. End of Interrupt Register permits software program to indicate the controller that a certain interrupt service routine has been finished.

Binary coded version of IRQ Source Status Register is also made available for software program to helpfully identify the interrupt source. Note that while taking this advantage, it should also take the binary coded version of End of Interrupt Register coincidently.

The essential Interrupt Table of ARM7EJ-S core is shown as **Table 10**.

Address	Description
00000000h	System Reset
00000018h	IRQ
0000001Ch	FIQ

Table 10 Interrupt Table of ARM7EJ-S

External Interrupt

This interrupt controller also integrates an External Interrupt Controller that can support up to 4 interrupt requests coming from external sources, the EINT0–3 as shown in **Figure 14**, and 4 WakeUp interrupt requests, i.e. EINT4-7, coming from peripherals used to inform system to resume system clock.

The four external interrupts can be used for different kind of applications, mainly for event detections: detection of hand free connection, detection of hood opening, detection of battery charger connection.

Since the external event may be unstable in a certain period, de-bounce mechanism is introduced to ensure the functionality. The circuitry is mainly used to verify that if the input signal remains stable for a programmable number of periods of the clock. When this condition is satisfied, for the appearance or the disappearance of the input, the output of the de-bounce logic will change to the desired state. Note that, because it uses the 32KHz slow clock for doing de-bounce process, the parameters takes effect no sooner than 1 32KHz clock cycle, ~31.25us, after software program sets them. For example of changing the polarity of an external interrupt, a 31.25us guard time shall be applied between the two events of changing the polarity value in EINT_CON register and End-of-Interrupt. Or an abnormal external interrupt could be triggered.

Note also that this External Interrupt Controller handles only level sensitive type of interrupt sources.

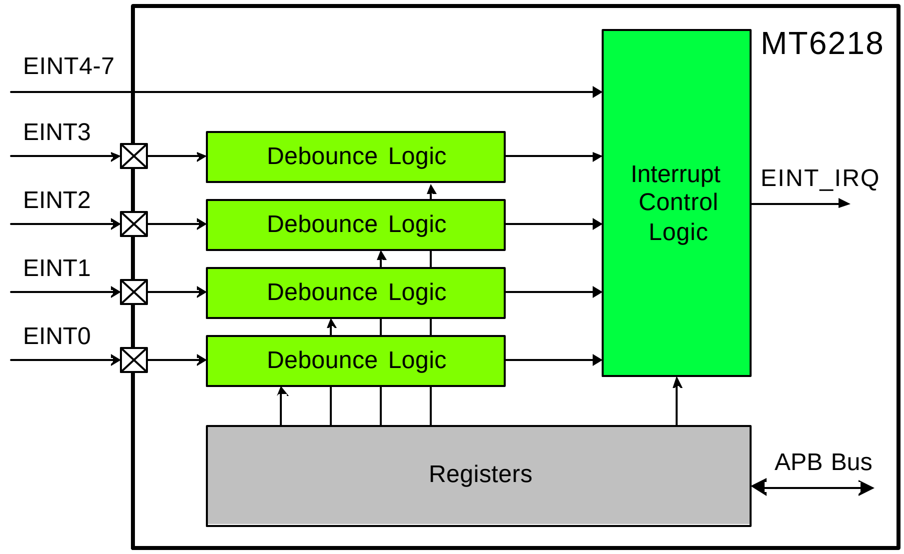

Figure 14 Block diagram of External Interrupt Controller

REGISTER ADDRESS	REGISTER NAME	SYNONYM
CIRQ + 0000h	IRQ Selection 0 Register	IRQ_SEL0
CIRQ + 0004h	IRQ Selection 1 Register	IRQ_SEL1
CIRQ + 0008h	IRQ Selection 2 Register	IRQ_SEL2
CIRQ + 000Ch	IRQ Selection 3 Register	IRQ_SEL3
CIRQ + 0010h	IRQ Selection 4 Register	IRQ_SEL4
CIRQ + 0014h	IRQ Selection 5 Register	IRQ_SEL5
CIRQ + 0018h	FIQ Selection Register	FIQ_SEL
CIRQ + 001Ch	IRQ Mask Register	IRQ_MASK

CIRQ + 0020h	IRQ Mask Disable Register	IRQ_MASK_DIS
CIRQ + 0024h	IRQ Mask Enable Register	IRQ_MASK_EN
CIRQ + 0028h	IRQ Status Register	IRQ_STA
CIRQ + 002Ch	IRQ End of Interrupt Register	IRQ_EOI
CIRQ + 0030h	IRQ Sensitive Register	IRQ_SENS
CIRQ + 0034h	IRQ Software Interrupt Register	IRQ_SOFT
CIRQ + 0038h	FIQ Control Register	FIQ_CON
CIRQ + 003Ch	FIQ End of Interrupt Register	FIQ_EOI
CIRQ + 0040h	Binary Coded Value of IRQ_STATUS	IRQ_STA2
CIRQ + 0044h	Binary Coded Value of IRQ_EOI	IRQ_EOI2
CIRQ + 0100h	EINT Status Register	EINT_STA
CIRQ + 0104h	EINT Mask Register	EINT_MASK
CIRQ + 0108h	EINT Mask Disable Register	EINT_MASK_DIS
CIRQ + 010Ch	EINT Mask Enable Register	EINT_MASK_EN
CIRQ + 0110h	EINT Interrupt Acknowledge Register	EINT_INTACK
CIRQ + 0114h	EINT Sensitive Register	EINT_SENS
CIRQ + 0120h	EINT0 De-bounce Control Register	EINT0_CON
CIRQ + 0130h	EINT1 De-bounce Control Register	EINT1_CON
CIRQ + 0140h	EINT2 De-bounce Control Register	EINT2_CON
CIRQ + 0150h	EINT3 De-bounce Control Register	EINT3_CON
CIRQ + 0160h	EINT4 De-bounce Control Register	EINT4_CON
CIRQ + 0170h	EINT5 De-bounce Control Register	EINT5_CON
CIRQ + 0180h	EINT6 De-bounce Control Register	EINT6_CON
CIRQ + 0190h	EINT7 De-bounce Control Register	EINT7_CON

Table 11 Interrupt Controller Register Map

3.5.2 Register Definitions

CIRQ+0000h IRQ Selection 0 Register IRQ_SEL0

Bit	31	30	29	28	27	26	25	24	23	22	21	20	19	18	17	16
Name			IRQ5					IRQ4					IRQ3			
Type			R/W					R/W					R/W			
Reset			5					4					3			
Bit	15	14	13	12	11	10	9	8	7	6	5	4	3	2	1	0
Name		IRQ2					IRQ1					IRQ0				
Type		R/W					R/W					R/W				
Reset		2					1					0				

CIRQ+0004h IRQ Selection 1 Register IRQ_SEL1

Bit	31	30	29	28	27	26	25	24	23	22	21	20	19	18	17	16
Name			IRQB					IRQA					IRQ9			
Type			R/W					R/W					R/W			

Reset			B					A					9			
Bit	15	14	13	12	11	10	9	8	7	6	5	4	3	2	1	0
Name		IRQ8					IRQ7					IRQ6				
Type		R/W					R/W					R/W				
Reset		8					7					6				

CIRQ+0008h IRQ Selection 2 Register IRQ_SEL2

Bit	31	30	29	28	27	26	25	24	23	22	21	20	19	18	17	16
Name			IRQ11					IRQ10					IRQF			
Type			R/W					R/W					R/W			
Reset			11					10					F			
Bit	15	14	13	12	11	10	9	8	7	6	5	4	3	2	1	0
Name		IRQE					IRQD					IRQC				
Type		R/W					R/W					R/W				
Reset		E					D					C				

CIRQ+000Ch IRQ Selection 3 Register IRQ_SEL3

Bit	31	30	29	28	27	26	25	24	23	22	21	20	19	18	17	16
Name			IRQ17					IRQ16					IRQ15			
Type			R/W					R/W					R/W			
Reset			17					16					15			
Bit	15	14	13	12	11	10	9	8	7	6	5	4	3	2	1	0
Name		IRQ14					IRQ13					IRQ12				
Type		R/W					R/W					R/W				
Reset		14					13					12				

CIRQ+0010h IRQ Selection 4 Register IRQ_SEL4

Bit	31	30	29	28	27	26	25	24	23	22	21	20	19	18	17	16
Name			IRQ1D					IRQ1C					IRQ1B			
Type			R/W					R/W					R/W			
Reset			1D					1C					1B			
Bit	15	14	13	12	11	10	9	8	7	6	5	4	3	2	1	0
Name		IRQ1A					IRQ19					IRQ18				
Type		R/W					R/W					R/W				
Reset		1A					19					18				

CIRQ+0014h IRQ Selection 5 Register IRQ_SEL5

Bit	31	30	29	28	27	26	25	24	23	22	21	20	19	18	17	16
Name																
Type																
Reset																
Bit	15	14	13	12	11	10	9	8	7	6	5	4	3	2	1	0
Name							IRQ1F					IRQ1E				
Type							R/W					R/W				
Reset							1F					1E				

CIRQ+0018h FIQ Selection Register FIQ_SEL

Bit	31	30	29	28	27	26	25	24	23	22	21	20	19	18	17	16
Name																
Type																
Reset																

Bit	15	14	13	12	11	10	9	8	7	6	5	4	3	2	1	0
Name												FIQ				
Type												R/W				
Reset												0				

The IRQ/FIQ Selection Registers provide system designers with a flexible routing scheme to make various mappings of priority among interrupt sources possible. It allows the interrupt sources being mapped onto interrupt requests of either FIQ or IRQ. Where only one interrupt source can be assigned to FIQ, the other ones should share IRQ by mapping them onto IRQ0 to IRQ1F connected to IRQ controller. The priority of IRQ0-IRQ1F is fixed, i.e. IRQ0 > IRQ1 > IRQ2 > … > IRQ1E > IRQ1F. During the software configuration process, the Interrupt Source Code of desired interrupt source should be written into source field of the corresponding IRQ_SEL0-IRQ_SEL4/FIQ_SEL. 5-bit Interrupt Source Codes for all interrupt sources are fixed and defined in **Table 12**.

Interrupt Source	Interrupt Source Code
GPI_FIQ	00000
TDMA_CTIRQ1	00001
TDMA_CTIRQ2	00010
DSP2CPU	00011
SIM	00100
DMA	00101
TDMA	00110
UART1	00111
KeyPad	01000
UART2	01001
GPTimer	01010
EINT	01011
USB	01100
MSDC	01101
RTC	01110
IrDA	01111
LCD	10000
UART3	10001
GPI	10010
WDT	10011
JPEG	10100
Resizer	10101
NFI	10110
B2PSI	10111
Reserved	11000
Reserved	11001
Reserved	11010
Reserved	11011

Reserved	11100
Reserved	11101
Reserved	11110
Reserved	11111

Table 12 Interrupt Source Code for Interrupt Sources

FIQ, IRQ0-1F The 5-bit content of this field would be the Interrupt Source Code shown in **Table 12** indicating that the certain interrupt source uses the associated interrupt line to generate interrupt requests.

CIRQ+001Ch IRQ Mask Register IRQ_MASK

Bit	31	30	29	28	27	26	25	24	23	22	21	20	19	18	17	16
Name	IRQ1F	IRQ1E	IRQ1D	IRQ1C	IRQ1B	IRQ1A	IRQ19	IRQ18	IRQ17	IRQ16	IRQ15	IRQ14	IRQ13	IRQ12	IRQ11	IRQ10
Type	R/W	R/W	R/W	R/W	R/W	R/W	R/W	R/W	R/W	R/W	R/W	R/W	R/W	R/W	R/W	R/W
Reset	1	1	1	1	1	1	1	1	1	1	1	1	1	1	1	1
Bit	15	14	13	12	11	10	9	8	7	6	5	4	3	2	1	0
Name	IRQF	IRQE	IRQD	IRQC	IRQB	IRQA	IRQ9	IRQ8	IRQ7	IRQ6	IRQ5	IRQ4	IRQ3	IRQ2	IRQ1	IRQ0
Type	R/W	R/W	R/W	R/W	R/W	R/W	R/W	R/W	R/W	R/W	R/W	R/W	R/W	R/W	R/W	R/W
Reset	1	1	1	1	1	1	1	1	1	1	1	1	1	1	1	1

This register contains mask bit for each interrupt line in IRQ Controller. It allows each interrupt source of IRQ0 to IRQ1F to be disabled or masked out separately under software control. After System Reset, all bit values will be set to ‘1’ to indicate that interrupt requests are prohibited.

IRQ0-1F Mask Control for the Associated Interrupt Source in IRQ Controller

0 Interrupt is enabled

1 Interrupt is disabled

CIRQ+0020h IRQ Mask Clear Register IRQ_MASK_CLR

Bit	31	30	29	28	27	26	25	24	23	22	21	20	19	18	17	16
Name	IRQ1F	IRQ1E	IRQ1D	IRQ1C	IRQ1B	IRQ1A	IRQ19	IRQ18	IRQ17	IRQ16	IRQ15	IRQ14	IRQ13	IRQ12	IRQ11	IRQ10
Type	W1C	W1C	W1C	W1C	W1C	W1C	W1C	W1C	W1C	W1C	W1C	W1C	W1C	W1C	W1C	W1C
Bit	15	14	13	12	11	10	9	8	7	6	5	4	3	2	1	0
Name	IRQF	IRQE	IRQD	IRQC	IRQB	IRQA	IRQ9	IRQ8	IRQ7	IRQ6	IRQ5	IRQ4	IRQ3	IRQ2	IRQ1	IRQ0
Type	W1C	W1C	W1C	W1C	W1C	W1C	W1C	W1C	W1C	W1C	W1C	W1C	W1C	W1C	W1C	W1C

This register is used to clear bits in the IRQ Mask Register. When writing to this register, each data bit which is high will cause the corresponding bit in the IRQ Mask Register to be cleared. Data bits which are low have no effect on the corresponding bits in the IRQ Mask Register

IRQ0-1F Clear corresponding bits in IRQ Mask Register.

0 no effect

1 Disable corresponding MASK bit

CIRQ+0024h IRQ Mask SET Register IRQ_MASK_SET

Bit	31	30	29	28	27	26	25	24	23	22	21	20	19	18	17	16
Name	IRQ1F	IRQ1E	IRQ1D	IRQ1C	IRQ1B	IRQ1A	IRQ19	IRQ18	IRQ17	IRQ16	IRQ15	IRQ14	IRQ13	IRQ12	IRQ11	IRQ10
Type	W1S	W1S	W1S	W1S	W1S	W1S	W1S	W1S	W1S	W1S	W1S	W1S	W1S	W1S	W1S	W1S
Bit	15	14	13	12	11	10	9	8	7	6	5	4	3	2	1	0
Name	IRQF	IRQE	IRQD	IRQC	IRQB	IRQA	IRQ9	IRQ8	IRQ7	IRQ6	IRQ5	IRQ4	IRQ3	IRQ2	IRQ1	IRQ0

Type	W1S	W1S	W1S	W1S	W1S	W1S	W1S	W1S	W1S	W1S	W1S	W1S	W1S	W1S	W1S	W1S

This register is used to set bits in the IRQ Mask Register. When writing to this register, each data bit which is high will cause the corresponding bit in the IRQ Mask Register to be set. Data bits which are low have no effect on the corresponding bits in the IRQ Mask Register

IRQ0-1F Set corresponding bits in IRQ Mask Register.

- **0** no effect
- **1** Enable corresponding MASK bit

CIRQ+0028h IRQ Source Status Register IRQ_STA

Bit	31	30	29	28	27	26	25	24	23	22	21	20	19	18	17	16
Name	IRQ1F	IRQ1E	IRQ1D	IRQ1C	IRQ1B	IRQ1A	IRQ19	IRQ18	IRQ17	IRQ16	IRQ15	IRQ14	IRQ13	IRQ12	IRQ11	IRQ10
Type	RC	RC	RC	RC	RC	RC	RC	RC	RC	RC	RC	RC	RC	RC	RC	RC
Reset	0	0	0	0	0	0	0	0	0	0	0	0	0	0	0	0
Bit	15	14	13	12	11	10	9	8	7	6	5	4	3	2	1	0
Name	IRQF	IRQE	IRQD	IRQC	IRQB	IRQA	IRQ9	IRQ8	IRQ7	IRQ6	IRQ5	IRQ4	IRQ3	IRQ2	IRQ1	IRQ0
Type	RC	RC	RC	RC	RC	RC	RC	RC	RC	RC	RC	RC	RC	RC	RC	RC
Reset	0	0	0	0	0	0	0	0	0	0	0	0	0	0	0	0

This Register allows software to poll which interrupt line generates the IRQ interrupt request. A bit set to '1' indicates a corresponding active interrupt line. Only one flag is active at a time. The IRQ_STA is type of READ-ONLY, write access will have no effect to the content.

IRQ0-1F Interrupt Indication for the Associated Interrupt Source

- **0** The associated interrupt source is non-active
- **1** The associated interrupt source is asserted

CIRQ+002Ch IRQ End of Interrupt Register IRQ_EOI

Bit	31	30	29	28	27	26	25	24	23	22	21	20	19	18	17	16
Name	IRQ1F	IRQ1E	IRQ1D	IRQ1C	IRQ1B	IRQ1A	IRQ19	IRQ18	IRQ17	IRQ16	IRQ15	IRQ14	IRQ13	IRQ12	IRQ11	IRQ10
Type	WO	WO	WO	WO	WO	WO	WO	WO	WO	WO	WO	WO	WO	WO	WO	WO
Reset	0	0	0	0	0	0	0	0	0	0	0	0	0	0	0	0
Bit	15	14	13	12	11	10	9	8	7	6	5	4	3	2	1	0
Name	IRQF	IRQE	IRQD	IRQC	IRQB	IRQA	IRQ9	IRQ8	IRQ7	IRQ6	IRQ5	IRQ4	IRQ3	IRQ2	IRQ1	IRQ0
Type	WO	WO	WO	WO	WO	WO	WO	WO	WO	WO	WO	WO	WO	WO	WO	WO
Reset	0	0	0	0	0	0	0	0	0	0	0	0	0	0	0	0

This register provides a mean for software to relinquish and refresh the Interrupt Controller. Writing a '1' to the specific bit position will result in an End of Interrupt Command internally to the corresponding interrupt line.

IRQ0-1F End of Interrupt Command for the Associated Interrupt Line

- **0** No service is currently in progress or pending
- **1** Interrupt request is in-service

CIRQ+0030h IRQ Sensitive Register IRQ_SENS

Bit	31	30	29	28	27	26	25	24	23	22	21	20	19	18	17	16
Name	IRQ1F	IRQ1E	IRQ1D	IRQ1C	IRQ1B	IRQ1A	IRQ19	IRQ18	IRQ17	IRQ16	IRQ15	IRQ14	IRQ13	IRQ12	IRQ11	IRQ10
Type	R/W	R/W	R/W	R/W	R/W	R/W	R/W	R/W	R/W	R/W	R/W	R/W	R/W	R/W	R/W	R/W
Reset	0	0	0	0	0	0	0	0	0	0	0	0	0	0	0	0
Bit	15	14	13	12	11	10	9	8	7	6	5	4	3	2	1	0
Name	IRQF	IRQE	IRQD	IRQC	IRQB	IRQA	IRQ9	IRQ8	IRQ7	IRQ6	IRQ5	IRQ4	IRQ3	IRQ2	IRQ1	IRQ0
Type	R/W	R/W	R/W	R/W	R/W	R/W	R/W	R/W	R/W	R/W	R/W	R/W	R/W	R/W	R/W	R/W

Reset	0	0	0	0	0	0	0	0	0	0	0	0	0	0	0	0

All interrupt lines of IRQ Controller, IRQ0-IRQ1F can be programmed as either edge or level sensitive. By default, all the interrupt lines are edge sensitive and should be active LOW. For edge sensitive interrupt line, while being activated, the output of edge-detection circuitry will remain HIGH until after the MCU acknowledges the interrupt by issuing End of Interrupt command and then being able to enable further interrupts to occur. For level sensitive interrupt lines, the interrupt source should be cleared before EOI command of writing IRQ_EOI in preventing another interrupt to occur.

IRQ0-1F Sensitive Type of the Associated Interrupt Source

- **0** Edge sensitivity with active LOW
- **1** Level sensitivity with active LOW

CIRQ+0034h IRQ Software Interrupt Register IRQ_SOFT

Bit	31	30	29	28	27	26	25	24	23	22	21	20	19	18	17	16
Name	IRQ1F	IRQ1E	IRQ1D	IRQ1C	IRQ1B	IRQ1A	IRQ19	IRQ18	IRQ17	IRQ16	IRQ15	IRQ14	IRQ13	IRQ12	IRQ11	IRQ10
Type	R/W	R/W	R/W	R/W	R/W	R/W	R/W	R/W	R/W	R/W	R/W	R/W	R/W	R/W	R/W	R/W
Reset	0	0	0	0	0	0	0	0	0	0	0	0	0	0	0	0
Bit	15	14	13	12	11	10	9	8	7	6	5	4	3	2	1	0
Name	IRQF	IRQE	IRQD	IRQC	IRQB	IRQA	IRQ9	IRQ8	IRQ7	IRQ6	IRQ5	IRQ4	IRQ3	IRQ2	IRQ1	IRQ0
Type	R/W	R/W	R/W	R/W	R/W	R/W	R/W	R/W	R/W	R/W	R/W	R/W	R/W	R/W	R/W	R/W
Reset	0	0	0	0	0	0	0	0	0	0	0	0	0	0	0	0

Setting “1” to the specific bit position generates a software interrupt for corresponding Interrupt Line before mask. This register is used for debug purpose.

IRQ0-IRQ1F Software Interrupt

CIRQ+0038h FIQ Control Register FIQ_CON

Bit	31	30	29	28	27	26	25	24	23	22	21	20	19	18	17	16
Name																
Type																
Reset																
Bit	15	14	13	12	11	10	9	8	7	6	5	4	3	2	1	0
Name															SENS	MASK
Type															R/W	R/W
Reset															0	1

This register provides a mean for software program to control the FIQ Controller.

MASK Mask Control for the FIQ Interrupt Source

- **0** Interrupt is enabled
- **1** Interrupt is disabled

SENS Sensitive Type of the FIQ Interrupt Source

- **0** Edge sensitivity with active LOW
- **1** Level sensitivity with active LOW

CIRQ+003Ch FIQ End of Interrupt Register FIQ_EOI

Bit	31	30	29	28	27	26	25	24	23	22	21	20	19	18	17	16
Name																
Type																
Reset																
Bit	15	14	13	12	11	10	9	8	7	6	5	4	3	2	1	0

Name																EOI
Type																WO
Reset																0

This register provides a mean for software to relinquish and refresh the FIQ Controller. Writing a '1' to the specific bit position will result in an End of Interrupt Command internally to the corresponding interrupt line.

EOI End of Interrupt Command

CIRQ+0040h Binary Coded Value of IRQ_STATUS IRQ_STA2

Bit	31	30	29	28	27	26	25	24	23	22	21	20	19	18	17	16
Name																
Type																
Reset																
Bit	15	14	13	12	11	10	9	8	7	6	5	4	3	2	1	0
Name												STS				
Type												RC				
Reset												0				

This Register is a binary coded version of IRQ_STA. It is used for software program to poll which interrupt line generates the IRQ interrupt request in much more easy way. Any read to it makes the same result of as reading IRQ_STA. The IRQ_STA2 is also type of READ-ONLY, write access takes no effect to the content. Note that, IRQ_STA2 should be coupled with IRQ_EOI2 while using it.

STS Binary Coded Value of IRQ_STA

CIRQ+0044h Binary Coded Value of IRQ_EOI IRQ_EOI2

Bit	31	30	29	28	27	26	25	24	23	22	21	20	19	18	17	16
Name																
Type																
Reset																
Bit	15	14	13	12	11	10	9	8	7	6	5	4	3	2	1	0
Name												EOI				
Type												WO				
Reset												0				

This register is a binary coded version of IRQ_EOI. It provides a more easy way for software program to relinquish and refresh the Interrupt Controller. Writing a specific code will result an End of Interrupt Command internally to the corresponding interrupt line. Note that, IRQ_EOI2 should be coupled with IRQ_STA2 while using it.

EOI Binary Coded Value of IRQ_EOI

CIRQ+0100h EINT Interrupt Status Register EINT_STA

Bit	31	30	29	28	27	26	25	24	23	22	21	20	19	18	17	16
Name																
Type																
Reset																
Bit	15	14	13	12	11	10	9	8	7	6	5	4	3	2	1	0
Name									EINT7	EINT6	EINT5	EINT4	EINT3	EINT2	EINT1	EINT0
Type									RO	RO	RO	RO	RO	RO	RO	RO
Reset									0	0	0	0	0	0	0	0

This register keeps up with current status that which EINT Source generates the interrupt request. If EINT sources are set to edge sensitivity, EINT_IRQ will be de-asserted while this register is read.

EINT0-EINT7 Interrupt Status

- **0** No Interrupt Request is generated
- **1** Interrupt Request is pending

CIRQ+0104h EINT Interrupt Mask Register EINT_MASK

Bit	31	30	29	28	27	26	25	24	23	22	21	20	19	18	17	16
Name																
Type																
Reset																
Bit	15	14	13	12	11	10	9	8	7	6	5	4	3	2	1	0
Name									EINT7	EINT6	EINT5	EINT4	EINT3	EINT2	EINT1	EINT0
Type									R/W	R/W	R/W	R/W	R/W	R/W	R/W	R/W
Reset									1	1	1	1	1	1	1	1

This register controls that if EINT Source is allowed to generate interrupt request. Setting a "1" to the specific bit position prohibits the External Interrupt Line to active accordingly.

EINT0-EINT7 Interrupt Mask

- **0** Interrupt Request is enabled
- **1** Interrupt Request is disabled

CIRQ+0108h EINT Interrupt Mask Clear Register EINT_MASK_CLR

Bit	31	30	29	28	27	26	25	24	23	22	21	20	19	18	17	16
Name																
Type																
Bit	15	14	13	12	11	10	9	8	7	6	5	4	3	2	1	0
Name									EINT7	EINT6	EINT5	EINT4	EINT3	EINT2	EINT1	EINT0
Type									W1C	W1C	W1C	W1C	W1C	W1C	W1C	W1C

This register is used to individually clear mask bit. Only the bits set to 1 are in effect, and these mask bits will set to 0. Else mask bits keep original value.

EINT0-EINT7 Disable Mask for the Associated External Interrupt Source

- **0** no effect
- **1** Disable corresponding MASK bit

CIRQ+010Ch EINT Interrupt Mask Set Register EINT_MASK_SET

Bit	31	30	29	28	27	26	25	24	23	22	21	20	19	18	17	16
Name																
Type																
Bit	15	14	13	12	11	10	9	8	7	6	5	4	3	2	1	0
Name									EINT7	EINT6	EINT5	EINT4	EINT3	EINT2	EINT1	EINT0
Type									W1S	W1S	W1S	W1S	W1S	W1S	W1S	W1S

This register is used to individually set mask bit. Only the bits set to 1 are in effect, and these mask bits will set to 1. Else mask bits keep original value.

EINT0-EINT7 Disable Mask for the Associated External Interrupt Source

- **0** no effect

1 Enable corresponding MASK bit

CIRQ+0110h EINT Interrupt Acknowledge Register EINT_INTACK

Bit	31	30	29	28	27	26	25	24	23	22	21	20	19	18	17	16
Name																
Type																
Reset																
Bit	15	14	13	12	11	10	9	8	7	6	5	4	3	2	1	0
Name									EINT7	EINT6	EINT5	EINT4	EINT3	EINT2	EINT1	EINT0
Type									WO	WO	WO	WO	WO	WO	WO	WO
Reset									0	0	0	0	0	0	0	0

Writing "1" to the specific bit position means to acknowledge the interrupt request correspondingly to the External Interrupt Line source.

EINT0-EINT7 Interrupt Acknowledge

0 No effect

1 Interrupt Request is acknowledged

CIRQ+0114h EINT Sensitive Register EINT_SENS

Bit	31	30	29	28	27	26	25	24	23	22	21	20	19	18	17	16
Name																
Type																
Reset																
Bit	15	14	13	12	11	10	9	8	7	6	5	4	3	2	1	0
Name													EINT3	EINT2	EINT1	EINT0
Type													R/W	R/W	R/W	R/W
Reset													1	1	1	1

Sensitive type of external interrupt source. Only EINT0– 3 need to be specified. EINT4 – 7 are always edge sensitive.

EINT0-3 Sensitive Type of the Associated External Interrupt Source

0 Edge sensitivity with active LOW

1 Level sensitivity with active LOW

CIRQ+01m0h EINTn De-bounce Control Register EINTn_CON

Bit	31	30	29	28	27	26	25	24	23	22	21	20	19	18	17	16
Name																
Type																
Reset																
Bit	15	14	13	12	11	10	9	8	7	6	5	4	3	2	1	0
Name	EN				POL	CNT										
Type	R/W				R/W	R/W										
Reset	0				0	0										

These registers control the de-bounce logic for external interrupt sources in order to minimize the possibility of false activations. EINT4– 7 have no de-bounce mechanism. Therefore only bit POL is used.

Note that n is from 0 to 7, and m is n plus 2.

CNT De-bounce Duration in terms of numbers of 32KHz clock cycles

POL Activation Type of the EINT Source

0 Negative polarity

1 Positive polarity

EN De-bounce Control Circuit

0 Disable

1 Enable

3.6 Internal Memory Controller

3.6.1 System RAM

MT6218B provides four 64K Byte size of on-chip memory modules acting as System RAM for data access with zero latency. Such module is composed of four high speed synchronous SRAMs with AHB Slave Interface connected to system backbone AHB Bus, as shown in Figure 15. The synchronous SRAM operates at the same clock as AHB Bus and is organized as 32-bit wide with 4 byte-write signals capable for byte operations.

3.6.2 System ROM

The System ROM is primarily used to store software program for Factory Programming. However, due to it' s advantageous zero latency performance, some of timing critical codes are also placed in this area. This module is composed of high-speed diffusion ROM with AHB Slave Interface connected to system backbone AHB Bus, as shown in Figure 15. It operates at the same clock as AHB Bus and is organized as 32-bit wide.

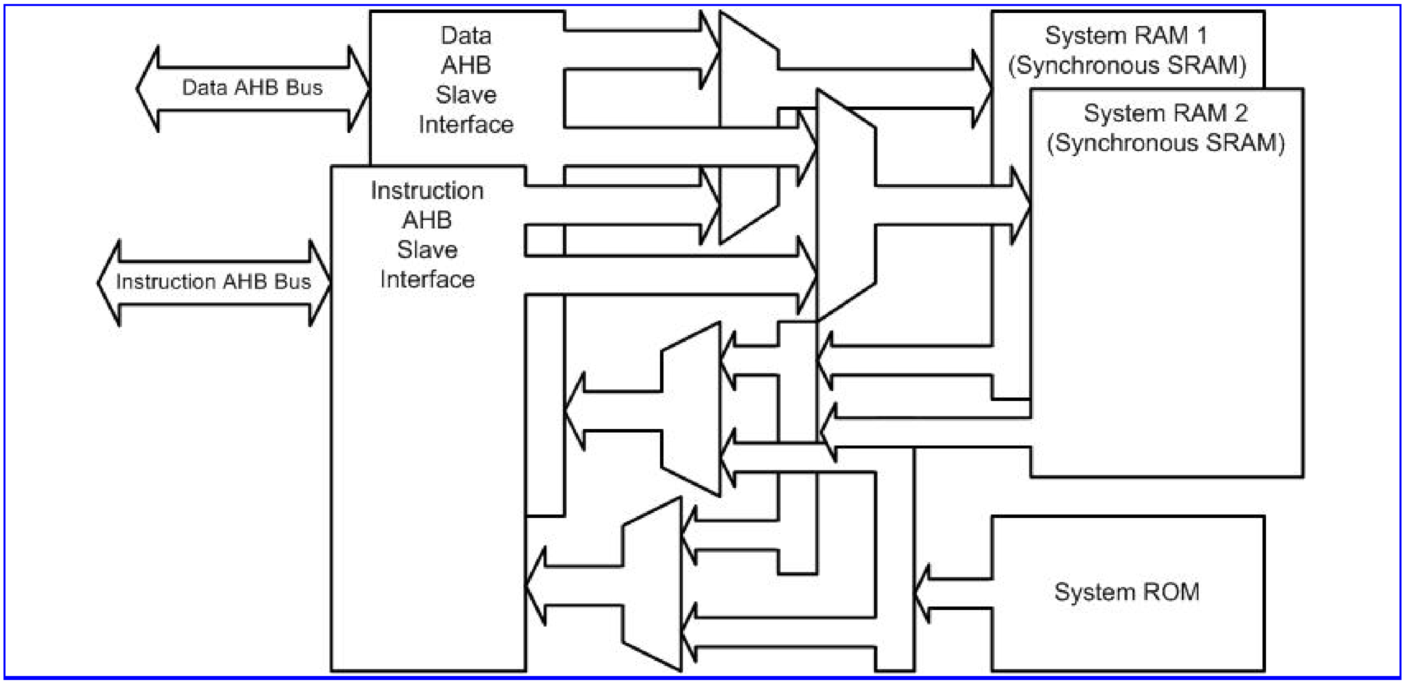

Figure 15 Block Diagram of Internal Memory Controller

3.6.3 Register Definitions

ROM+0000h System Memory Configuration Register SYSRAM_CNF

Bit	31	30	29	28	27	26	25	24	23	22	21	20	19	18	17	16
Name	SYSRAM_KEY															

Type	W															
Reset	6218															
Bit	15	14	13	12	11	10	9	8	7	6	5	4	3	2	1	0
Name	EN3		ID3		EN2		ID2		EN1		ID1		EN0		ID0	
Type	W	-	W		W	-	W		W	-	W		W	-	W	
Reset	1	0	1	1	1	0	1	0	1	0	0	1	1	0	0	0

SYSRAM KEY System RAM Key

3.7 External Memory Interface

3.7.1 General Description

MT6218B incorporates a powerful and flexible memory controller, External Memory Interface, to connect with a variety of memory components. This controller provides generic access schemes to asynchronous/synchronous type of memory devices, such as Flash Memory and SRAM. It can simultaneously support up to 8 memory banks BANK0-BANK7 with maximum size of 64MB each.

Since most of the target asynchronous components have similar AC requirements, it is desirable to have a generic configuration scheme to interface them. Such that, software program can treat different components by simply specifying certain predefined parameters. All those parameters are based on cycle time of system clock. The interface definition based on such asynchronous/synchronous scheme is listed in **Table 13**. Note that, this interface always operates data in Little Endian format for all type of accesses.

Page/Burst mode Flash is supported for those applications required to run EIP (execution in place).

Signal Name	Type	Description
EA[25:0]	O	Address Bus
ED[15:0]	I/O	Data Bus
EWR#	O	Write Enable Strobe
ERD#	O	Read Enable Strobe
ELB#	O	Lower Byte Strobe
EUB#	O	Upper Byte Strobe
ECS# [7:0]	O	BANK0~BANK7 Selection Signal
EPDN	O	Pseudo SRAM Power Down Control Signal
ECLK	O	Burst Mode Flash Clock Signal
EADV#	O	Burst Mode Flash Address Latch Signal

Table 13 **External Memory Interface of MT6218B for Asynchronous/Synchronous Type Components**

This controller can also handle parallel type of LCD. By connecting with them, 8080 type of control method is supported. The interface definition is detailed in **Table 14**.

Bus Type	ECS7#	EA25	ERD#	EWR#	ED[15:0]
8080 series	CS#	A0	RD#	WR#	D[15:0]

Table 14 Configuration for LCD Parallel Interface

MediaTek Inc. Confidential

REGISTER ADDRESS	REGISTER NAME	SYNONYM
EMI + 0000h	EMI Control Register for BANK0	EMI_CONA
EMI + 0008h	EMI Control Register for BANK1	EMI_CONB
EMI + 0010h	EMI Control Register for BANK2	EMI_CONC
EMI + 0018h	EMI Control Register for BANK3	EMI_COND
EMI + 0020h	EMI Control Register for BANK4	EMI_CONE
EMI + 0028h	EMI Control Register for BANK5	EMI_CONF
EMI + 0030h	EMI Control Register for BANK6	EMI_CONG
EMI + 0038h	EMI Control Register for BANK7	EMI_CONH
EMI + 0040h	EMI Remap Control Register	EMI_REMAP
EMI + 0044h	EMI General Control Register	EMI_GEN
EMI + 0050h	Code Cache and Code Prefetch Control Register	PREFETCH_CON
EMI + 0060h	EMI Patch Enable Register	EMI_PATCHEN
EMI + 0064h	EMI Patch 0 Address Register	EMI_PADDR0
EMI + 006Ch	EMI Patch 0 Instruction Register	EMI_PDATA0
EMI + 0074h	EMI Patch 1 Address Register	EMI_PADDR1
EMI + 007Ch	EMI Patch 1 Instruction Register	EMI_PDATA1

Table 15 External Memory Interface Register Map

3.7.2 Register Definitions

EMI+0000h EMI Control Register for BANK0 EMI_CONA

Bit	31	30	29	28	27	26	25	24	23	22	21	20	19	18	17	16
Name	C2WS		C2WH		C2RS				ADV			PRLT			BMODE	PMODE
Type	R/W		R/W		R/W				R/W			R/W			R/W	R/W
Reset	0		0		0				1			0			0	0
Bit	15	14	13	12	11	10	9	8	7	6	5	4	3	2	1	0
Name	DW	RBLN		WST					PSIZE			RLT				
Type	R/W	R/W		R/W					R/W			R/W				
Reset	0	1		0					0			7				

EMI+0008h EMI Control Register for BANK1 EMI_CONB

Bit	31	30	29	28	27	26	25	24	23	22	21	20	19	18	17	16
Name	C2WS		C2WH		C2RS				ADV			PRLT			BMODE	PMODE
Type	R/W		R/W		R/W				R/W			R/W			R/W	R/W
Reset	0		0		0				1			0			0	0
Bit	15	14	13	12	11	10	9	8	7	6	5	4	3	2	1	0
Name	DW	RBLN		WST					PSIZE			RLT				
Type	R/W	R/W		R/W					R/W			R/W				
Reset	0	1		0					0			7				

EMI+0010h EMI Control Register for BANK2 EMI_CONC

Bit	31	30	29	28	27	26	25	24	23	22	21	20	19	18	17	16
Name	C2WS		C2WH		C2RS				ADV			PRLT			BMODE	PMODE
Type	R/W		R/W		R/W				R/W			R/W			R/W	R/W
Reset	0		0		0				1			0			0	0
Bit	15	14	13	12	11	10	9	8	7	6	5	4	3	2	1	0
Name	DW	RBLN		WST					PSIZE			RLT				
Type	R/W	R/W		R/W					R/W			R/W				
Reset	0	1		0					0			7				

EMI+0018h EMI Control Register for BANK3 EMI_COND

Bit	31	30	29	28	27	26	25	24	23	22	21	20	19	18	17	16
Name	C2WS		C2WH		C2RS				ADV			PRLT			BMODE	PMODE
Type	R/W		R/W		R/W				R/W			R/W			R/W	R/W
Reset	0		0		0				1			0			0	0
Bit	15	14	13	12	11	10	9	8	7	6	5	4	3	2	1	0
Name	DW	RBLN		WST					PSIZE			RLT				
Type	R/W	R/W		R/W					R/W			R/W				
Reset	0	1		0					0			7				

EMI+0020h EMI Control Register for BANK4 EMI_CONE

Bit	31	30	29	28	27	26	25	24	23	22	21	20	19	18	17	16
Name	C2WS		C2WH		C2RS				ADV			PRLT			BMODE	PMODE
Type	R/W		R/W		R/W				R/W			R/W			R/W	R/W
Reset	0		0		0				1			0			0	0
Bit	15	14	13	12	11	10	9	8	7	6	5	4	3	2	1	0
Name	DW	RBLN		WST					PSIZE			RLT				
Type	R/W	R/W		R/W					R/W			R/W				
Reset	0	1		0					0			7				

EMI+0028h EMI Control Register for BANK5 EMI_CONF

Bit	31	30	29	28	27	26	25	24	23	22	21	20	19	18	17	16
Name	C2WS		C2WH		C2RS				ADV			PRLT			BMODE	PMODE
Type	R/W		R/W		R/W				R/W			R/W			R/W	R/W
Reset	0		0		0				1			0			0	0
Bit	15	14	13	12	11	10	9	8	7	6	5	4	3	2	1	0
Name	DW	RBLN		WST					PSIZE			RLT				
Type	R/W	R/W		R/W					R/W			R/W				
Reset	0	1		0					0			7				

EMI+0030h EMI Control Register for BANK6 EMI_CONG

Bit	31	30	29	28	27	26	25	24	23	22	21	20	19	18	17	16
Name	C2WS		C2WH		C2RS				ADV			PRLT			BMODE	PMODE
Type	R/W		R/W		R/W				R/W			R/W			R/W	R/W
Reset	0		0		0				1			0			0	0
Bit	15	14	13	12	11	10	9	8	7	6	5	4	3	2	1	0

Name	DW	RBLN		WST					PSIZE			RLT				
Type	R/W	R/W		R/W					R/W			R/W				
Reset	0	1		0					0			7				

EMI+0038h EMI Control Register for BANK7 EMI_CONH

Bit	31	30	29	28	27	26	25	24	23	22	21	20	19	18	17	16
Name	C2WS		C2WH		C2RS				ADV			PRLT			BMODE	PMODE
Type	R/W		R/W		R/W				R/W			R/W			R/W	R/W
Reset	0		0		0				1			0			0	0
Bit	**15**	**14**	**13**	**12**	**11**	**10**	**9**	**8**	**7**	**6**	**5**	**4**	**3**	**2**	**1**	**0**
Name	DW	RBLN		WST					PSIZE			RLT				
Type	R/W	R/W		R/W					R/W			R/W				
Reset	0	1		0					0			7				

For each bank (BANK0-BANK7), there is a dedicate control register in connection with the associated bank controller. These registers have the timing parameters that help the controller to convey memory access into proper timing waveform. Note that, Except for parameter DW that is in unit of bit, all the other parameters specified explicitly are based on bus clock speed in terms of cycle count.

RLT Read Latency Time

Specifying the parameter RLT turns effectively to insert wait-states in bus transfer to requesting agent. Such parameter should be chosen carefully to meet the common parameter tACC (access time) for device in read operation. Example is shown below.

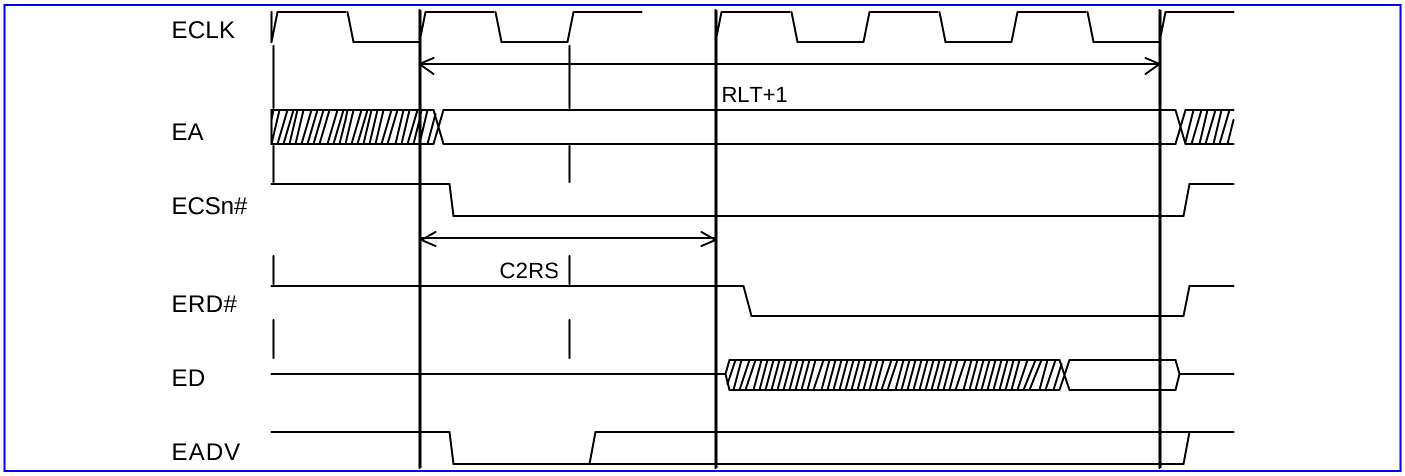

Figure 16 Read Wait State Timing Diagram

Access Time	Read Latency Time		
	13MHz	26MHz	52MHz
60ns	0	1	3
90ns	1	2	4
120ns	1	3	5

Table 16 Reference value of Read Latency Time for variant memory devices

PMODE Page Mode Control

If target device supports page mode operations, the Page Mode Control can be enabled. Read in Page Mode is determined by set of parameters: PRLT and PSIZE.

0 disable page mode operation

1 enable page mode operation

BMODE Burst Mode Control

If target device supports burst mode operations, the Burst Mode Control can be enabled. Read in Burst Mode is determined by set of parameters: PRLT and PSIZE.

0 disable burst mode operation

1 enable burst mode operation

PRLT Read Latency Within the Same Page or in Burst Mode Operation

Since page/burst mode operation only help to eliminate read latency in subsequent burst within the same page, it doesn' t matter with the initial latency at all. Thus, it should still adopt RLT parameter for initial read or burst read between different pages though PMODE or BMODE is set "1".

000 zero wait state

001 one wait state

010 two wait state

011 three wait state

100 four wait state

101 five wait state

110 six wait state

111 seven wait state

PSIZE Page/Burst Size for Page/Burst Mode Operation

These bit positions describe the page/burst size that the Page/Burst Mode enabled device will behave.

000 8 byte, EA[22:3] remains the same

001 16 byte, EA[22:4] remains the same

010 32 byte, EA[22:5] remains the same

011 64 byte, EA[22:6] remains the same

100~110 reserved for future use

111 continuous sequential burst

WST Write Wait State

Specifying the parameters to extend adequate setup and hold time for target component in write operation. Those parameters also effectively insert wait-states in bus transfer to requesting agent. Example is shown in **Figure 17** and **Table 17**.

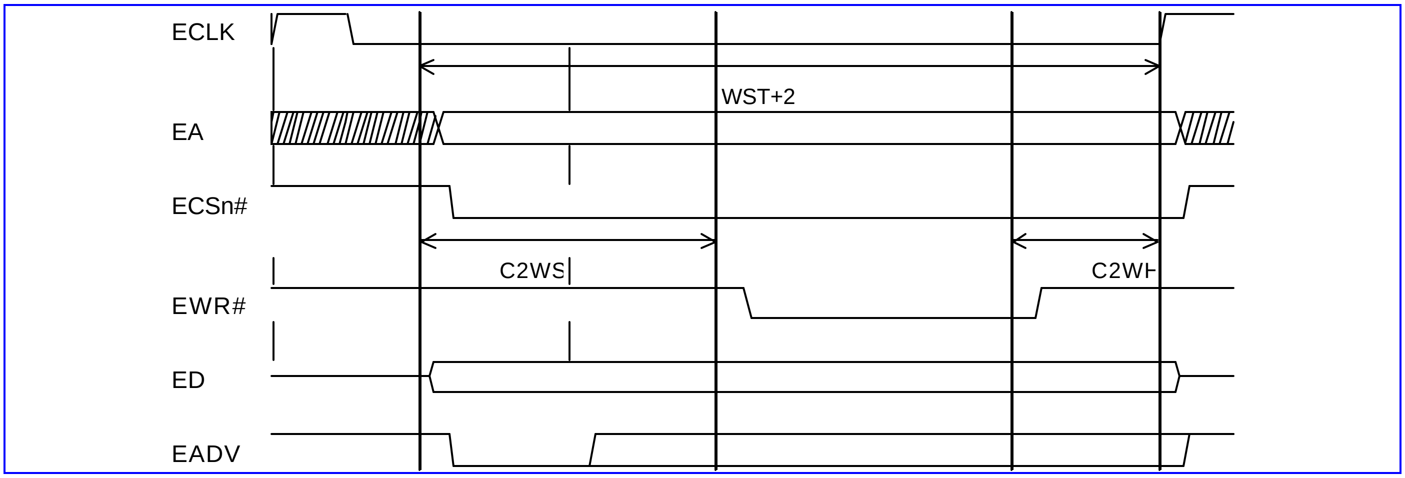

Figure 17 Write Wait State Timing Diagram

Write Pulse Width (Write Data Setup Time)	Write Wait State		
	13MHz	26MHz	52MHz
30ns	0	0	1
60ns	0	1	3
90ns	1	2	4

Table 17 Reference value of Write Wait State for variant memory devices

RBLN Read Byte Lane Enable

0 all byte lanes held high during system reads

1 all byte lanes held low during system reads

DW Data Width

Since the data width of internal system bus is fixed as 32-bit wide, any access to external components might be converted into more than one cycles, depending on transfer size and the parameter DW for the specific component. In general, this bit position of certain component is cleared to '0' upon system reset and is programmed during the system initialization process prior to begin access to it. Note that, dynamic changing this parameter will cause unexpected result.

0 16-bit device

1 8-bit device

EMI+0030h EMI Re-map Control Register EMI_REMAP

Bit	15	14	13	12	11	10	9	8	7	6	5	4	3	2	1	0
Name															RM1	RM0
Type															R/W	R/W
Reset															BOOT	0

This register accomplishes the Memory Re-mapping Mechanism. Basically, it provides the kernel software program or system designer a capability of changing memory configuration dynamically. Three kinds of configuration are permitted.

RM[1:0] Re-mapping control for Boot Code, BANK0 and BANK1, refer to **Table 18**.

RM[1:0]	Address 00000000h (MB0)	Address 10000000h (MB1)
00	Boot Code	BANK1

01	BANK1	BANK0
10	BANK0	BANK1
11	BANK1	BANK0

Table 18 Memory Map Configuration

EMI+0034h EMI General Control Register EMI_GEN

Bit	31	30	29	28	27	26	25	24	23	22	21	20	19	18	17	16
Name	CSR	CE2	CE4	CE8					DSR	DE2	DE4	DE8				
Type	R/W	R/W	R/W	R/W					R/W	R/W	R/W	R/W				
Reset	1	1	0	0					1	1	0	0				

Bit	15	14	13	12	11	10	9	8	7	6	5	4	3	2	1	0
Name	PRCEN	PRCCNT				BANK	BURST	EDA	FLUSH		PDNE	CKE		CKDLY		
Type	R/W	R/W				R/W	R/W	R/W	R/W		R/W	R/W		R/W		
Reset	0	0				1	1	1	1		0	0		0		

This register is general control that can alter the behavior of all bank controllers according to specific features below.

PRCEN Pseudo SRAM Write Protection Control

- **0** Disable
- **1** Enable

PRCCNT Pseudo SRAM Dummy Cycle Insertion Count

BANK Inter-Bank Turnaround Cycle Insertion

- **0** Disable
- **1** Enable

BURST Burst Access Dummy Cycle Insertion

- **0** Disable
- **1** Enable

EDA ED[15:0] Activity

- **0** Drive ED Bus only on write access
- **1** Always drive ED Bus except for read access

FLUSH Instruction Cache Write Flush Control

PDNE Pseudo SRAM Power Down Mode Control

CKE Burst Mode Flash Clock Enable Control

CKDLY Burst Mode Flash Clock Delay Control

EMI+0050h Code Cache and Code Prefetch Control Register PREFETCH_CON

Bit	31	30	29	28	27	26	25	24	23	22	21	20	19	18	17	16
Name	DB7	DB6	DB5	DB4	DB3	DB2	DB1	DB0						DWRP8	DPREF	DCACH
Type	R/W	R/W	R/W	R/W	R/W	R/W	R/W	R/W						R/W	RW	R/W
Reset	0	0	0	0	0	0	0	0						0	0	0

Bit	15	14	13	12	11	10	9	8	7	6	5	4	3	2	1	0
Name	IB7	IB6	IB5	IB4	IB3	IB2	IB1	IB0						IWRP8	IPREF	ICACH
Type	R/W	R/W	R/W	R/W	R/W	R/W	R/W	R/W						R/W	RW	R/W
Reset	0	0	0	0	0	0	0	0						0	0	0

MediaTek Inc. Confidential

This register is used to control the functions of Code/Data Cache and Code/Data Prefetch. The Code/Data Cache is a low latency memory that can store up to 16 most recently used instruction codes/data. While an instruction/data fetch hits the one in the code/data cache, not only the access time could be minimized, but also the singling to off chip ROM or Flash could be relieved. In addition, it can also store up to 16 prefetched instruction codes/data while Code/Data Prefetch function is enabled. The Code/Data Prefetch is a sophisticated controller that can predict and fetch the instruction codes/data in advance based on previous code/data fetching sequence. As the Code/Data Prefetch always performs the fetch staffs during the period that the EMI interface is in IDLE state. The bandwidth to off chip memory could be fully utilized. On the other hand, if the instruction/data fetch hits the one of prefetched codes/data, the access time could be minimized and then enhance the overall system performance.

xWRP8 Prefetch Size

0 8 bytes

1 16 bytes

xBn Prefetchable/Cacheable Area

There bit positions determine the prefetchable and cacheable region in which the instruction/data could be cached or prefetched.

xPREF Prefetch Enable

xCACH Cache Enable

EMI+0060h EMI Patch Enable Register EMI_PATCHEN

Bit	15	14	13	12	11	10	9	8	7	6	5	4	3	2	1	0
Name															EN1	EN0
Type															R/W	R/W
Reset															0	0

ENn Patch Enable

EMI+0064h EMI Patch Address 0 Register EMI_PADD0

Bit	31	30	29	28	27	26	25	24	23	22	21	20	19	18	17	16
Name	PADD0															
Type	R/W															
Bit	15	14	13	12	11	10	9	8	7	6	5	4	3	2	1	0
Name	PADD0															
Type	R/W															

PADD0 Patch 0 Address

EMI+006Ch EMI Patch Instruction 0 Register EMI_PDAT0

Bit	31	30	29	28	27	26	25	24	23	22	21	20	19	18	17	16
Name	PDAT0															
Type	R/W															
Bit	15	14	13	12	11	10	9	8	7	6	5	4	3	2	1	0
Name	PDAT0															
Type	R/W															

PDAT0 Patch 0 Instruction

EMI+0074h EMI Patch Address 1 Register EMI_PADD1

Bit	31	30	29	28	27	26	25	24	23	22	21	20	19	18	17	16

Name	PADD1															
Type	R/W															
Bit	15	14	13	12	11	10	9	8	7	6	5	4	3	2	1	0
Name	PADD1															
Type	R/W															

PADD1 Patch 1 Address

EMI+007Ch EMI Patch Instruction 1 Register EMI_PDAT1

Bit	31	30	29	28	27	26	25	24	23	22	21	20	19	18	17	16
Name	PDAT1															
Type	R/W															
Bit	15	14	13	12	11	10	9	8	7	6	5	4	3	2	1	0
Name	PDAT1															
Type	R/W															

PDAT1 Patch 1 Instruction

4 Microcontroller Peripherals

Microcontroller (MCU) Peripherals are devices that are under direct control of the Microcontroller. Most of them are attached to the Advanced Peripheral Bus (APB) of the MCU subsystem, thus shall serve as APB slaves. Each MCU peripheral has to be accessed as a memory-mapped I/O device, i.e., the MCU or the DMA bus master read or write specific peripheral by issuing memory-addressed transactions.

Following is the list of MCU peripherals:

- Pulse-Width Modulation Outputs
- Alerter
- SIM Interface
- Keypad Scanner
- LCD Interface
- General Purpose Inputs/Outputs
- Watchdog Timer
- Real Time Clock
- UART
- IrDA Framer
- MMC/SD/MS/MS Pro
- Baseband Serial Interface (BSI)
- Baseband Parallel Interface (BPI)
- Automatic Power Control (APC) Unit
- Automatic Frequency Control (AFC) Unit
- Auxiliary ADC unit
- General-Purpose Timers
- TDMA Timer
- MCU Coprocessors
- JPEG Decoder
- Imagine Resizer
- NAND Flash Controller

Most of the above items will be mentioned in this chapter, while the others will be covered in other chapters according to their particular category of function.

MediaTek Inc. Confidential

4.1 Pulse-Width Modulation Outputs

4.1.1 General Description

Two generic pulse-width modulators are implemented to generate pulse sequences with programmable frequency and duty cycle for LCD backlight or charging purpose. The duration of the PWM output signal is Low as long as the internal counter value is greater than or equals to the threshold value and the waveform is shown in **Figure 18**.

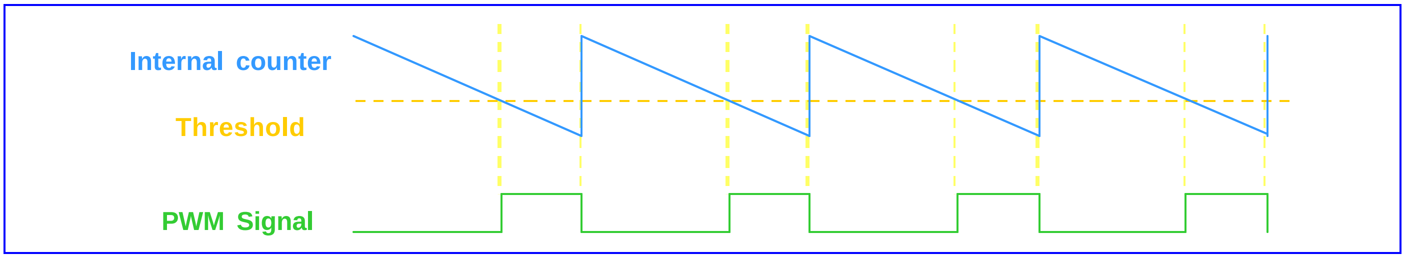

Figure 18 PWM waveform

The frequency and volume of PWM output signal are determined by these registers: PWM_COUNT, PWM_THRES, PWM_CON. POWERDOWN (pdn_pwm) signal is applied to power-down the PWM module. When PWM is deactivated (POWERDOWN=1), the output will in low state.

The output PWM frequency is determined

by: $\frac{CLK}{(PWM_CON+1)\times 2\times(PWM_COUNT+1)}$ CLK = 13000000 when CLKSEL = 1, $CLK = 32000$ $when CLKSEL = 0$

The output PWM duty cycle is determined by: $\frac{PWM_THRES}{PWM_COUNT+1}$

Care should be taken that PWM_THRES should be less than the PWM_COUNT. If this condition is not satisfied, the output pulse of the PWM will be always in High state.

4.1.2 Register Definitions

PWM+0000h PWM1 Control register PWM1_CON

Bit	15	14	13	12	11	10	9	8	7	6	5	4	3	2	1	0
Name														CLKSEL	CLK [1:0]	
Type														R/W	R/W	
Reset														0	0	

CLK Select PWM1 clock prescaler scale

- **00** CLK Hz
- **01** CLK/2 Hz
- **10** CLK/4 Hz
- **11** CLK/8 Hz

Note: When PWM1 module is disabled, its output should be keep in LOW state.

CLKSEL Select PWM1 clock

- **0** CLK=13M Hz

MediaTek Inc. Confidential

1 CLK=32K Hz

PWM+0004h PWM1 max counter value register PWM1_COUNT

Bit	15	14	13	12	11	10	9	8	7	6	5	4	3	2	1	0
Name				PWM1_COUNT [12:0]												
Type				R/W												
Reset				1FFFh												

PWM1_COUNT PWM1 max counter value. It will be the initial value for the internal counter. If PWM1_COUNT is written when the internal counter is counting backwards, no matter which mode it is, there is no effect until the internal counter counts down to zero, i.e. a complete period.

PWM+0008h PWM1 Threshold Value register PWM1_THRES

Bit	15	14	13	12	11	10	9	8	7	6	5	4	3	2	1	0
Name				PWM1_THRES [12:0]												
Type				R/W												
Reset				0												

PWM1_THRES Threshold value. When the internal counter value is greater than or equals to PWM1_THRES, the PWM1 output signal will be "0"; when the internal counter is less than PWM1_THRES, the PWM1 output signal will be "1".

PWM+000Ch PWM2 Control register PWM2_CON

Bit	15	14	13	12	11	10	9	8	7	6	5	4	3	2	1	0
Name														CLKSEL	CLK [1:0]	
Type														R/W	R/W	
Reset														0	0	

CLK Select PWM2 clock prescaler scale

00 CLK Hz

02 CLK/2 Hz

10 CLK/4 Hz

11 CLK/8 Hz

Note: When PWM2 module is disabled, its output should be keep in LOW state.

CLKSEL Select PWM2 clock

0 CLK=13M Hz

1 CLK=32K Hz

PWM+0010h PWM2 max counter value register PWM2_COUNT

Bit	15	14	13	12	11	10	9	8	7	6	5	4	3	2	1	0
Name				PWM2_COUNT [12:0]												
Type				R/W												
Reset				1FFFh												

PWM2_COUNT PWM2 max counter value. It will be the initial value for the internal counter. If PWM2_COUNT is written when the internal counter is counting backwards, no matter which mode it is, there is no effect until the internal counter counts down to zero, i.e. a complete period.

PWM+0014h PWM2 Threshold Value register PWM2_THRES

Bit	15	14	13	12	11	10	9	8	7	6	5	4	3	2	1	0
Name				PWM2_THRES [12:0]												
Type				R/W												
Reset				0												

PWM2_THRES Threshold value. When the internal counter value is greater than or equals to PWM2_THRES, the PWM1 output signal will be "0"; when the internal counter is less than PWM2_THRES, the PWM2 output signal will be "1".

Figure 19 shows the PWM waveform with register value present.

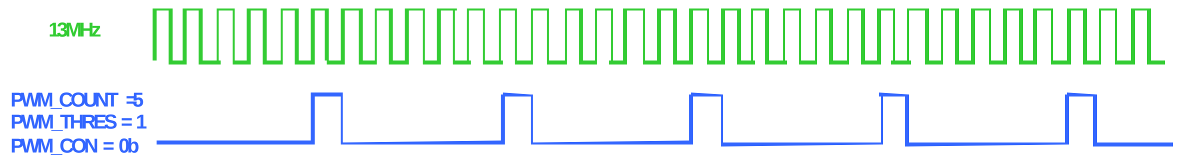

Figure 19 PWM waveform with register value present

4.2 Alerter

4.2.1 General Description

The output of Alerter has two sources: one is the enhanced pwm output signal, which is implemented embedded in Alerter module; the other is PDM signal from DSP domain directly. The enhanced pwm with three operation modes is implemented to generate a signal with programmable frequency and tone volume. The frequency and volume are determined by four registers: ALERTER_CNT1, ALERTER_THRES, ALERTER_CNT2 and ALERTER_CON. ALERTER_CNT1 and ALERTER_CNT2 are the initial counting values of internal counter1 and internal counter2 respectively. POWERDOWN signal is applied to power-down the Alerter module. When Alerter is deactivated (POWERDOWN=1), the output will be in low state.

With ALERTER_CON, the output source can be chosen from enhanced pwm or PDM. The waveform of the alerter from enhanced pwm source in different modes can be shown in **Figure 20**. In mode 1, the polarity of alerter output signal according to the relationship between internal counter1 and the programmed threshold will be inverted each time internal counter2 reaches zero. In mode2, each time the internal counter2 count backwards to zero the alerter output signal is normal pwm signal (i.e. signal is low as long as the internal counter1 value is greater than or equals to ALERTER_THRES, and it is high when the internal counter1 is less than ALERTER_THRES) or low state by turns. In mode3, the value of internal counter2 has no effect on output signal, i.e. the alerter output signal is low as long as the internal counter1 value is above the programmed threshold and is high the internal counter1 is less than ALERTER_THRES when no matter what value the internal counter2 is.

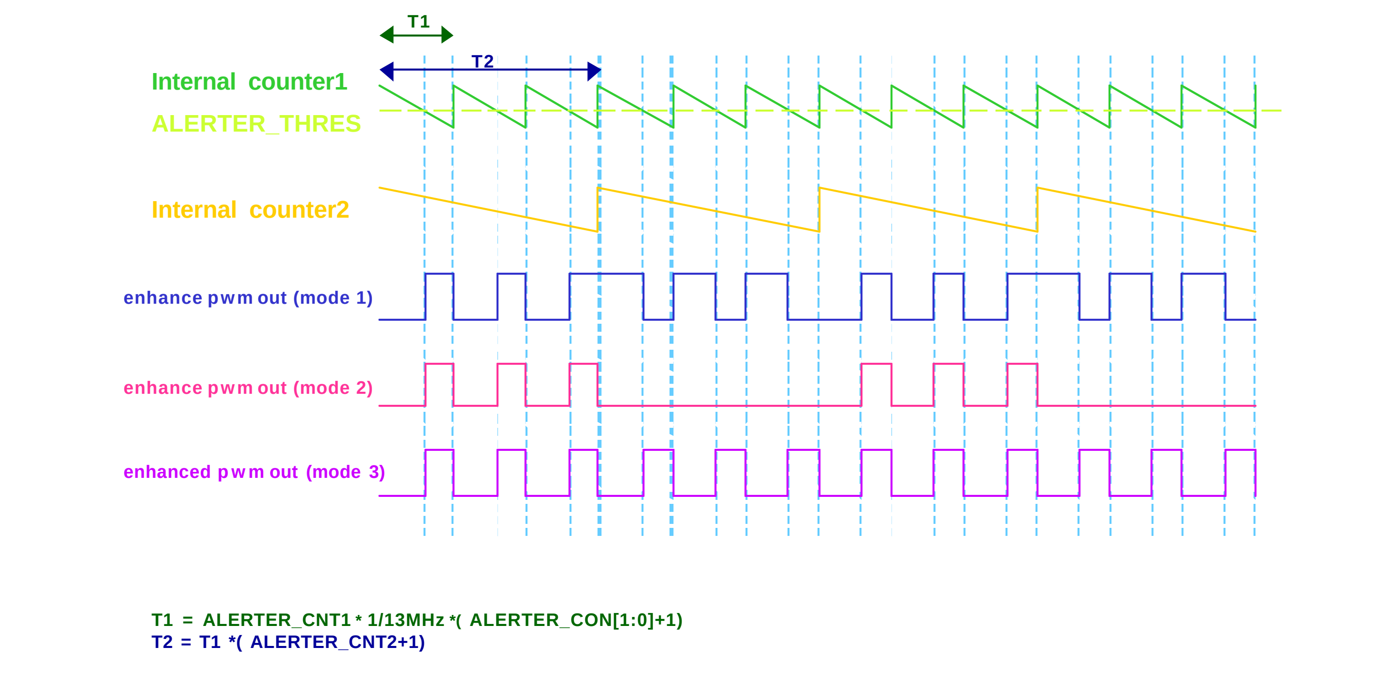

Figure 20 Alerter waveform

The output signal frequency is determined by:

$$\begin{cases} \dfrac{13000000}{2\times(ALERTER_CON[1:0]+1)\times(ALERTER_CNT1+1)\times(ALERTER_CNT2+1)} & \text{for mode 1 and mode 2} \\ \dfrac{13000000}{(ALERTER_CNT1+1)\times(ALERTER_CON[1:0])} & \text{for mode 3} \end{cases}$$

The volume of the output signal is determined by: $\dfrac{ALERTER_THRES}{ALERTER_CNT1+1}$

4.2.2 Register Definitions

ALTER+0000h Alerter counter1 value register — ALERTER_CNT1

Bit	15	14	13	12	11	10	9	8	7	6	5	4	3	2	1	0
Name	ALERTER_CNT1 [15:0]															
Type	R/W															
Reset	FFFFh															

ALERTER_CNT1 Alerter max counter's value. ALERTER_CNT1 is the initial value of internal counter1. If ALERTER_CNT1 is written when the internal counter1 is counting backwards, no matter which mode it is, there is no effect until the internal counter1 counts down to zero, i.e. a complete period.

ALTER+0004h Alerter threshold value register — ALERTER_THRES

Bit	15	14	13	12	11	10	9	8	7	6	5	4	3	2	1	0
Name	ALERTER_THRES [15:0]															

Type	R/W
Reset	0

ALERTER_THRES Threshold value. When the internal counter1 value is greater than or equals to ALERTER_THRES, the Alerter output signal will be low state; when the counter1 is less than ALERTER_THRES, the Alerter output signal will be high state.

ALTER+0008h Alerter counter2 value register ALERTER_CNT2

Bit	15	14	13	12	11	10	9	8	7	6	5	4	3	2	1	0
Name											ALERTER_CNT2 [5:0]					
Type											R/W					
Reset											111111b					

AlERTER_CNT2 ALERTER_CNT2 is the initial value for internal counter2. The internal counter2 decreases by one everytime the internal counter1 count down to be zero. The polarity of alerter output signal which depends on the relationship between the internal counter1 and ALERTER_THRES will be inverted anytime when the internal counter2 counts down to zero. E.g. in the beginning, the output signal is low when the internal counter1 isn't less ALERTER_THRES and is high when the internal counter1 is less than ALERTER_THRES. But after the internal counter2 counts down to zero, the output signal will be high when the internal counter1 isn't less than ALERTER_THRES and will be low when the internal counter1 is less than ALERTER_THRES.

ALTER+000Ch Alerter control register ALERTER_CON

Bit	15	14	13	12	11	10	9	8	7	6	5	4	3	2	1	0
Name								TYPE				MODE			CLK [1:0]	
Type								R/W				R/W			R/W	
Reset								0				0			0	

CLK Select PWM Waveform clock

00 13M Hz

01 13/2M Hz

10 13/4M Hz

11 13/8M Hz

MODE Select Alerter mode

00 Mode 1 selected

01 Mode 2 selected

10 Mode 3 selected

TYPE Select the ALERTER output source from PWM or PDM

0 Output generated from PWM path

1 Output generated from PDM path

Note: When alerter module is power down, its output should be kept in low state.

Figure 21 shows the Alerter waveform with register value present.

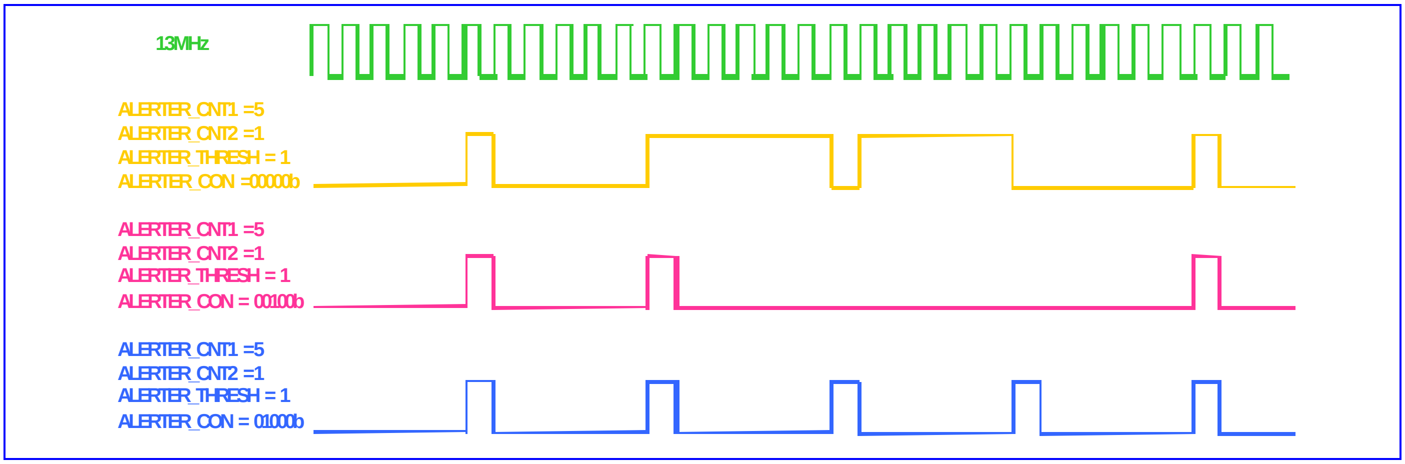

Figure 21 Alerter output signal from enhanced pwm with register value present

4.3 SIM Interface

The MT6218B contains a dedicated smart card interface to allow the MCU access to the SIM card. It can operate via 5 terminals, using SIMVCC, SIMSEL, SIMRST, SIMCLK and SIMDATA.

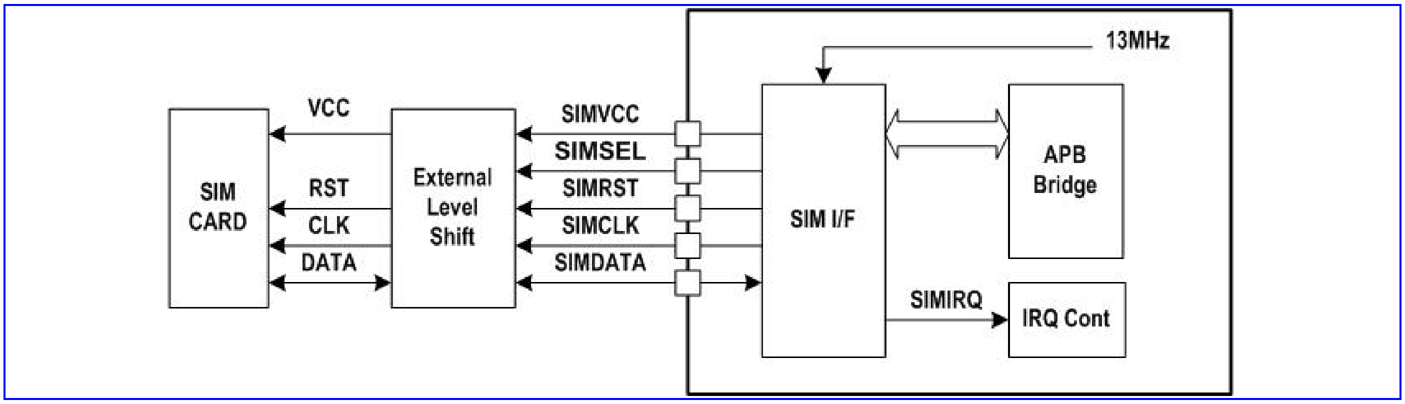

Figure 22 SIM Interface Block Diagram

The SIMVCC is used to control the external voltage supply to the SIM card and SIMSEL determines the regulated smart card supply voltage. SIMRST is used as the SIM card reset signal. Besides, SIMDATA and SIMCLK are used for data exchange purpose.

Basically, the SIM interface acts as a half duplex asynchronous communication port and its data format is composed of ten consecutive bits: a start bit in state Low, eight information bits, and a tenth bit used for parity checking. The data format can be divided into two modes as follows:

<u>Direct Mode (ODD=SDIR=SINV=0)</u>

SB D0 D1 D2 D3 D4 D5 D6 D7 PB

SB: Start Bit (in state Low)

Dx: Data Byte (LSB is first and logic level ONE is High)

PB: Even Parity Check Bit

Indirect Mode (ODD=SDIR=SINV=1)

SB N7 N6 N5 N4 N3 N2 N1 N0 PB

SB: Start Bit (in state Low)

Nx: Data Byte (MSB is first and logic level ONE is Low)

PB: Odd Parity Check Bit

If the receiver gets a wrong parity bit, it will respond by pulling the SIMDATA Low to inform the transmitter and the transmitter will retransmit the character.

When the receiver is a SIM Card, the error response starts 0.5 bits after the PB and it may last for 1~2 bit periods.

When the receiver is the SIM interface, the error response starts 0.5 bits after the PB and lasts for 1.5 bit period.

When the SIM interface is the transmitter, it will take totally 14 bits guard period whether the error response appears. If the receiver shows the error response, the SIM interface will retransmit the previous character again else it will transmit the next character.

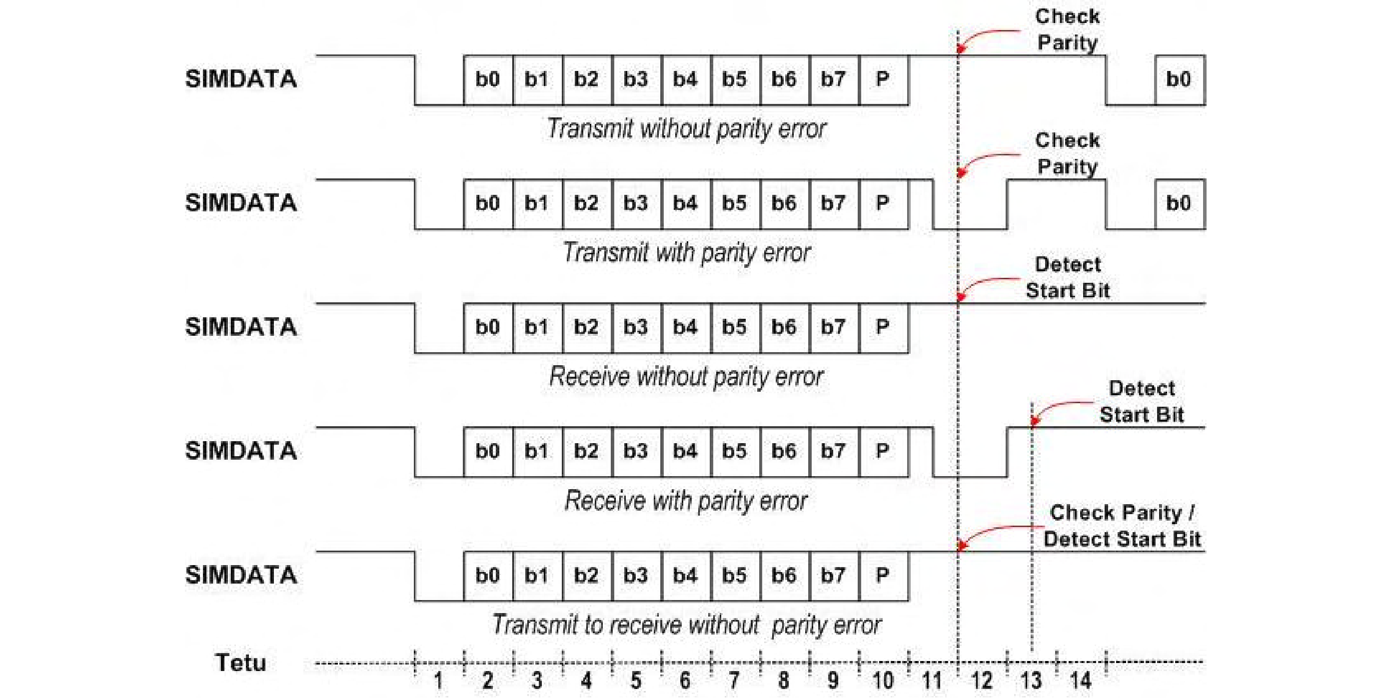

Figure 23 SIM Interface Timing Diagram

4.3.1 Register Definitions

SIM+0000h SIM module control register SIM_CON

Bit	15	14	13	12	11	10	9	8	7	6	5	4	3	2	1	0
Name														WRST	CSTOP	SIMON
Type														W	R/W	R/W
Reset														0	0	0

SIMON SIM card power-up/power-down control

- **0** Initiate the card deactivation sequence
- **1** Initiate the card activation sequence

CSTOP Enable clock stop mode. Together with CPOL in SIM_CNF register, it determines the polarity of the SIMCLK in this mode.

- **0** Enable the SIMCLK output.
- **1** Disable the SIMCLK output

WRST SIM card warm reset control

SIM+0004h SIM module configuration register SIM_CNF

Bit	15	14	13	12	11	10	9	8	7	6	5	4	3	2	1	0
Name						HFEN	T0EN	T1EN	TOUT	SIMSEL	ODD	SDIR	SINV	CPOL	TXACK	RXACK
Type						R/W	R/W	R/W	R/W	R/W	R/W	R/W	R/W	R/W	R/W	R/W
Reset						0	0	0	0	0	0	0	0	0	0	0

RXACK SIM card reception error handshake control

- **0** Disable character receipt handshaking
- **1** Enable character receipt handshaking

TXACK SIM card transmission error handshake control

- **0** Disable character transmission handshaking
- **1** Enable character transmission handshaking

CPOL SIMCLK polarity control in clock stop mode

- **0** Make SIMCLK stop in LOW level
- **1** Make SIMCLK stop in HIGH level

SINV Data Inverter.

- **0** Not invert the transmitted and received data
- **1** Invert the transmitted and received data

SDIR Data Transfer Direction

- **0** LSB is transmitted and received first
- **1** MSB is transmitted and received first

ODD Select odd or even parity

- **0** Even parity
- **1** Odd parity

SIMSEL SIM card supply voltage select

- **0** SIMSEL pin is set to LOW level
- **1** SIMSEL pin is set to HIGH level

TOUT SIM work waiting time counter control

- **0** Disable Time-Out counter
- **1** Enable Time-Out counter

T1EN T=1 protocol controller control

- **0** Disable T=1 protocol controller
- **1** Enable T=1 protocol controller

T0EN T=0 protocol controller control

- **0** Disable T=0 protocol controller
- **1** Enable T=0 protocol controller

HFEN Hardware flow control

0 Disable hardware flow control

1 Enable hardware flow control

SIM +0008h SIM Baud Rate Register SIM_BRR

Bit	15	14	13	12	11	10	9	8	7	6	5	4	3	2	1	0
Name										BAUD[4:0]					SIMCLK[1:0]	
Type										R/W					R/W	
Reset										22d					01	

SIMCLK Set SIMCLK frequency

00 13/2 MHz

01 13/4 MHz

10 13/8 MHz

11 13/12 MHz

BAUD Determines the 16*baud rate as a division of SIMCLK (SIMCLK/BAUD[3:0])

SIM +0010h SIM interrupt enable register SIM_IRQEN

Bit	15	14	13	12	11	10	9	8	7	6	5	4	3	2	1	0
Name						EDCERR	T1END	RXERR	T0END	SIMOFF	ATRERR	TXERR	TOUT	OVRUN	RXTIDE	TXTIDE
Type						R/W	R/W	R/W	R/W	R/W	R/W	R/W	R/W	R/W	R/W	R/W
Reset						0	0	0	0	0	0	0	0	0	0	0

For all these bits

0 Interrupt is disabled

1 Interrupt is enabled

SIM +0014h SIM module status register SIM_STA

Bit	15	14	13	12	11	10	9	8	7	6	5	4	3	2	1	0
Name						EDCERR	T1END	RXERR	T0END	SIMOFF	ATRERR	TXERR	TOUT	OVRUN	RXTIDE	TXTIDE
Type						R/C	R/C	R/C	R/C	R/C	R/C	R/C	R/C	R/C	R	R
Reset						—	—	—	—	—	—	—	—	—	—	—

TXTIDE Transmit FIFO tide mark reached interrupt occurred

RXTIDE Receive FIFO tide mark reached interrupt occurred

OVRUN Transmit/Receive FIFO overrun interrupt occurred

TOUT Between character timeout interrupt occurred

TXERR Character transmission error interrupt occurred

ATRERR ATR start time-out interrupt occurred

SIMOFF Card deactivation complete interrupt occurred

T0END Data Transfer handled by T=0 Controller completed interrupt occurred

RXERR Character reception error interrupt occurred

T1END Data Transfer handled by T=1 Controller completed interrupt occurred

EDCERR T=1 Controller CRC error occurred

SIM +0020h SIM retry limit register SIM_RETRY

Bit	15	14	13	12	11	10	9	8	7	6	5	4	3	2	1	0

Name						TXRETRY								RXRETRY		
Type						R/W								R/W		
Reset						3h								3h		

RXRETRY Specify the max. numbers of receive retries that are allowed when parity error has occurred.

TXRETRY Specify the max. numbers of transmit retries that are allowed when parity error has occurred.

SIM +0024h SIM FIFO tide mark register SIM_TIDE

Bit	15	14	13	12	11	10	9	8	7	6	5	4	3	2	1	0
Name					TXTIDE[3:0]								RXTIDE[3:0]			
Type					R/W								R/W			
Reset					0h								0h			

RXTIDE Trigger point for RXTIDE interrupt

TXTIDE Trigger point for TXTIDE interrupt

SIM +0030h Data register used as Tx/Rx Data Register SIM_DATA

Bit	15	14	13	12	11	10	9	8	7	6	5	4	3	2	1	0
Name									DATA[7:0]							
Type									R/W							
Reset									—							

DATA Eight data digits. These correspond to the character being read or written

SIM +0034h SIM FIFO count register SIM_COUNT

Bit	15	14	13	12	11	10	9	8	7	6	5	4	3	2	1	0
Name												COUNT[4:0]				
Type												R/W				
Reset												0h				

COUNT The number of characters in the SIM FIFO when read, and flushes when written.

SIM +0040h SIM activation time register SIM_ATIME

Bit	15	14	13	12	11	10	9	8	7	6	5	4	3	2	1	0
Name	ATIME[15:0]															
Type	R/W															
Reset	AFC7h															

ATIME The register defines the duration, in SIM clock cycles, of the time taken for each of the three stages of the card activation process

SIM +0044h SIM deactivation time register SIM_DTIME

Bit	15	14	13	12	11	10	9	8	7	6	5	4	3	2	1	0
Name					DTIME[11:0]											
Type					R/W											
Reset					3E7h											

DTIME The register defines the duration, in 13MHz clock cycles, of the time taken for each of the three stages of the card deactivation sequence

SIM +0048h Character to character waiting time register SIM_WTIME

Bit	15	14	13	12	11	10	9	8	7	6	5	4	3	2	1	0

Name	WTIME[15:0]
Type	R/W
Reset	983h

WTIME Maximum interval between the leading edge of two consecutive characters in 4 ETU unit

SIM +004Ch Block to block guard time register SIM_GTIME

Bit	15	14	13	12	11	10	9	8	7	6	5	4	3	2	1	0
Name													GTIME			
Type													R/W			
Reset													10d			

GTIME Minimum interval between the leading edge of two consecutive characters sent in opposite directions in ETU unit

SIM +0060h SIM command header register: INS SIM_INS

Bit	15	14	13	12	11	10	9	8	7	6	5	4	3	2	1	0
Name								INSD	SIMINS[7:0]							
Type								R/W	R/W							
Reset								0h	0h							

SIMINS This field should be identical to the INS instruction code. When writing to this register, the T=0 controller will be activated and data transfer will be initiated.

INSD [Description for this register field]

0 T=0 controller receives data from the SIM card

1 T=0 controller sends data to the SIM card

SIM +0064h SIM command header register: P3 SIM_P3(ICC_LEN)

Bit	15	14	13	12	11	10	9	8	7	6	5	4	3	2	1	0
Name								SIMP3[8:0]								
Type								R/W								
Reset								0h								

SIMP3 This field should be identical to the P3 instruction code. It should be written prior to the SIM_INS register. While the data transfer is going on, this field shows the no. of the remaining data to be sent or to be received

SIM +0068h SIM procedure byte register: SW1 SIM_SW1(ICC_LEN)

Bit	15	14	13	12	11	10	9	8	7	6	5	4	3	2	1	0
Name									SIMSW1[7:0]							
Type									R							
Reset									0h							

SIMSW1 This field holds the last received procedure byte for debug purpose. When the T0END interrupt occurred, it keeps the SW1 procedure byte.

SIM +006Ch SIM procedure byte register: SW2 SIM_SW2(ICC_EDC)

Bit	15	14	13	12	11	10	9	8	7	6	5	4	3	2	1	0
Name									SIMSW2[7:0]							
Type									R							

Reset									0h

SIMSW2 This field holds the SW2 procedure byte

4.3.2 SIM Card Insertion and Removal

The detection of physical connection to the SIM card and card removal is done by the external interrupt controller or by GPIO.

4.3.3 Card Activation and Deactivation

The card activation and deactivation sequence both are controlled by H/W. The MCU initiates the activation sequence by writing a "1" to bit 0 of the SIM_CON register, and then the interface performs the following activation sequence:

- Assert SIMRST LOW
- Set SIMVCC at HIGH level and SIMDATA in reception mode
- Enable SIMCLK clock
- De-assert SIMRST HIGH (required if it belongs to active low reset SIM card)

The final step in a typical card session is contact deactivation in order that the card is not electrically damaged. The deactivation sequence is initiated by writing a "0" to bit 0 of the SIM_CON register, and then the interface performs the following deactivation sequence:

- Assert SIMRST LOW
- Set SCIMCLK at LOW level
- Set SIMDATA at LOW level
- Set SIMVCC at LOW level

4.3.4 Answer to Reset Sequence

After card activation, a reset operation results in an answer from the card consisting of the initial character TS, followed by at most 32 characters. The initial character TS provides a bit synchronization sequence and defines the conventions to interpret data bytes in all subsequent characters.

On reception of the first character, TS, MCU should read this character, establish the respective required convention and reprogram the related registers. These processes should be completed prior to the completion of reception of the next character. And then, the remainder of the ATR sequence is received, read via the SIM_DATA in the selected convention and interpreted by the S/W.

The timing requirement and procedures for ATR sequence are handled by H/W and shall meet the requirement of ISO 7816-3 as shown in **Figure 24**.

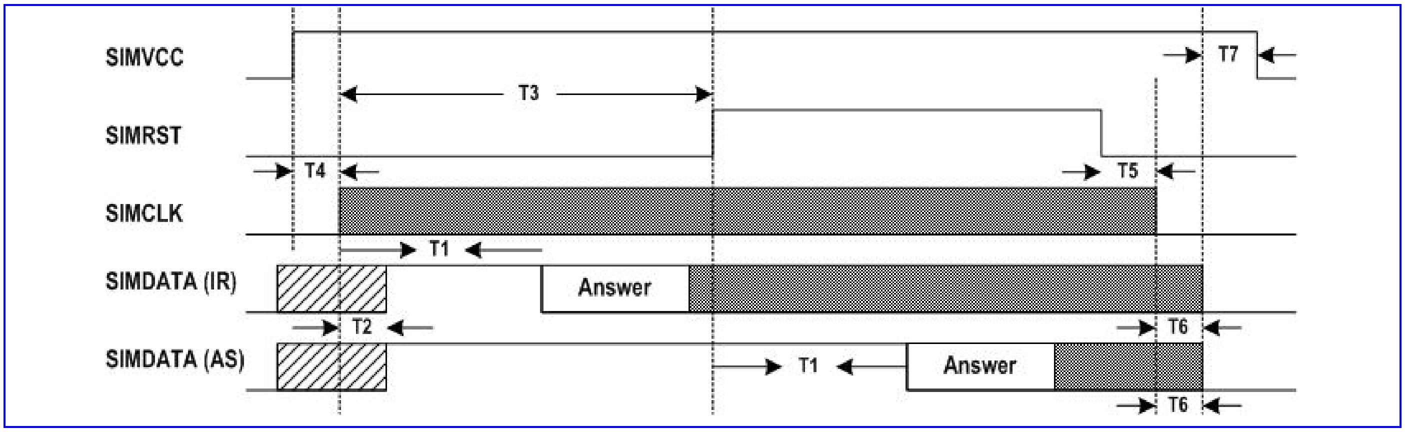

Figure 24 Answer to Reset Sequence

Time	Value	Comment
T1	> 400 SIMCLK	SIMCLK start to ATR appear
T2	< 200 SIMCLK	SIMCLK start to SIMDATA in reception mode
T3	> 40000 SIMCLK	SIMCLK start to SIMRST High
T4	—	SIMVCC High to SIMCLK start
T5	—	SIMRST Low to SIMCLK stop
T6	—	SIMCLK stop to SIMDATA Low
T7	—	SIMDATA Low to SIMVCC Low

Table 19 Answer to Reset Sequence Time-Out Condition

4.3.5 SIM Data Transfer

Two transfer modes are provided, either in software controlled byte by byte fashion or in a block fashion using T=0 controller and DMA controller. In both modes, the time-out counter could be enabled to monitor the elapsed time between two consecutive bytes.

4.3.5.1 Byte Transfer Mode

This mode is used during ATR and PPS procedure. In this mode, the SIM interface only ensures error free character transmission and reception.

Receiving Character

Upon detection of the start-bit sent by SIM card, the interface transforms into reception mode and the following bits are shifted into an internal register. If no parity error is detected or character-receive handshaking is disabled, the received-character is written into the SIM FIFO and the SIM_CNT register is increased by one. Otherwise, the SIMDATA line is held low at 0.5 etu after detecting the parity error for 1.5 etus, and the character is re-received. If a character fails to be received correctly for the RXRETRY times, the receive-handshaking is aborted and the last-received character is written into the SIM FIFO, the SIM_CNT is increased by one and the RXERR interrupt is generated

When the number of characters held in the receive FIFO exceeds the level defined in the SIM_TIDE register, a RXTIDE interrupt is generated. The number of characters held in the SIM FIFO can be determined by reading the SIM_CNT register and writing to this register will flush the SIM FIFO.

MediaTek Inc. Confidential

Sending Character

Characters that are to be sent to the card are first written into the SIM FIFO and then automatically transmitted to the card at timed intervals. If character-transmit handshaking is enabled, the SIMDATA line is sampled at 1 etu after the parity bit. If the card indicates that it did not receive the character correctly, the character is retransmitted a maximum of TXRETRY times before a TXERR interrupt is generated and the transmission is aborted. Otherwise, the succeeding byte in the SIM FIFO is transmitted.

If a character fails to be transmitted and a TXERR interrupt is generated, the interface needs to be reset by flushing the SIM FIFO before any subsequent transmit or receive operation.

When the number of characters held in the SIM FIFO falls below the level defined in the SIM_TIDE register, a TXTIDE interrupt is generated. The number of characters held in the SIM FIFO can be determined by reading the SIM_CNT register and writing to this register will flush the SIM FIFO.

4.3.5.2 Block Transfer Mode

Basically, the SIM interface is designed to work in conjunction with the T=0 protocol controller and the DMA controller during non-ATR and non-PPS phase, though it is still possible for software to service the data transfer manually like in byte transfer mode if necessary and thus the T=0 protocol should be controlled by software.

The T=0 controller is accessed via four registers representing the instruction header bytes INS and P3, and the procedure bytes SW1 and SW2. These registers are:

SIM_INS, SIM_P3

SIM_SW1, SIM_SW2

During characters transfer, SIM_P3 holds the number of characters to be sent or to be received and SIM_SW1 holds the last received procedure byte including NULL, ACK, NACK and SW1 for debug purpose.

Data Receive Instruction

Data Receive Instructions receive data from the SIM card. It is instantiated as the following procedure.

```
1. Enable the T=0 protocol controller by setting the T0EN bit to 1 in SIM_CNF register
2. Program the SIM_TIDE register to 0x0000 (TXTIDE = 0, RXTIDE = 0)
3. Program the SIM_IRQEN to 0x019C (Enable RXERR, TXERR, T0END, TOUT and OVRUN interrupts)
4. Write CLA, INS, P1, P2 and P3 into SIM FIFO
5. Program the DMA controller :
   DMAn_MSBSRC and DMAn_LSBSRC : address of SIM_DATA register
   DMAn_MSBDST and DMAn_LSBDST : memory address reserved to store the received characters
   DMAn_COUNT : identical to P3 or 256 (if P3 == 0)
   DMAn_CON : 0x0078
6. Write P3 into SIM_P3 register and then INS into SIM_INS register (Data Transfer is initiated
   now)
7. Enable the Time-out counter by setting the TOUT bit to 1 in SIM_CNF register
8. Start the DMA controller by writing 0x8000 into the DMAn_START register to
```

Upon completion of the Data Receive Instruction, T0END interrupt will be generated and then the Time-out counter should be disabled by setting the TOUT bit back to 0 in SIM_CNF register.

If error occurs during data transfer (RXERR, TXERR, OVRUN or TOUT interrupt is generated), the SIM card should be deactivated first and then activated prior subsequent operations.

Data Send Instruction

Data Send Instructions send data to the SIM card. It is instantiated as the following procedure.

1. Enable the T=0 protocol controller by setting the T0EN bit to 1 in SIM_CNF register
2. Program the SIM_TIDE register to 0x0100 (TXTIDE = 1, RXTIDE = 0)
3. Program the SIM_IRQEN to 0x019C (Enable RXERR, TXERR, T0END, TOUT and OVRUN interrupts)
4. Write CLA, INS, P1, P2 and P3 into SIM FIFO
5. Program the DMA controller :
   DMA*n*_MSBSRC and DMA*n*_LSBSRC : memory address reserved to store the transmitted characters
   DMA*n*_MSBDST and DMA*n*_LSBDST : address of SIM_DATA register
   DMA*n*_COUNT : identical to P3
   DMA*n*_CON : 0x0074
6. Write P3 into SIM_P3 register and then (0x0100 | INS) into SIM_INS register (Data Transfer is initiated now)
7. Enable the Time-out counter by setting the TOUT bit to 1 in SIM_CNF register
8. Start the DMA controller by writing 0x8000 into the DMA*n*_START register

Upon completion of the Data Send Instruction, T0END interrupt will be generated and then the Time-out counter should be disabled by setting the TOUT bit back to 0 in SIM_CNF register.

If error occurs during data transfer (RXERR, TXERR, OVRUN or TOUT interrupt is generated), the SIM card should be deactivated first and then activated prior subsequent operations.

4.4 Keypad Scanner

4.4.1 General Description

The keypad can be divided into two parts: one is the keypad interface including 7 columns and 6 rows; the other is the key detection block which provides key pressed, key released and de-bounce mechanism. Each time key pressed or key released, i.e. something different in the 7 x 6 matrix, the key detection block will sense it, and it will start to recognize if it's a key pressed or key released event. Whenever the key status changes and is stable, a KEYPAD IRQ will be issued. The MCU can then read the key(s) pressed directly in KP_HI_KEY, KP_MID_KEY and KP_LOW_KEY registers. To ensure that the key pressed information won't be missed, the status register in keypad won't be read clear by APB bus read command. The status register only changes by the key-pressed detection FSM. This keypad can detect one or two key-pressed simultaneously with any combination. **Figure 25** shows one key pressed condition. **Figure 26**(a) and **Figure 26**(b) indicate two keys pressed cases. Since the key press detection depends on the high or low level of the external keypad interface, if keys are pressed at the same time and these exists one key is on the same column and the same row with the other keys, there will get a redundant key; e.g. there are three keys, key1 = (x1, y1), key2 = (x2, y2), key3 = (x1, y2), key4 = (x2, y1) will be detected, but key4 is a redundant one. Hence, the keypad can detect one or two keys pressed simultaneously at any combination. Due to the keypad interface, more than two keys pressed simultaneously with some specific pattern will get the wrong information. Without the specific pattern, the keypad-scanning block can detect 11 keys at the same time and it's shown as **Figure 27**.

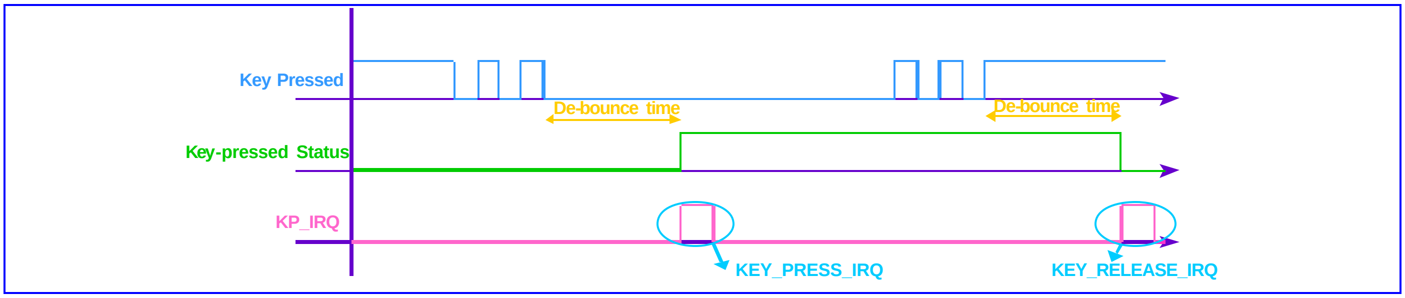

Figure 25 One key pressed with de-bounce mechanism denoted

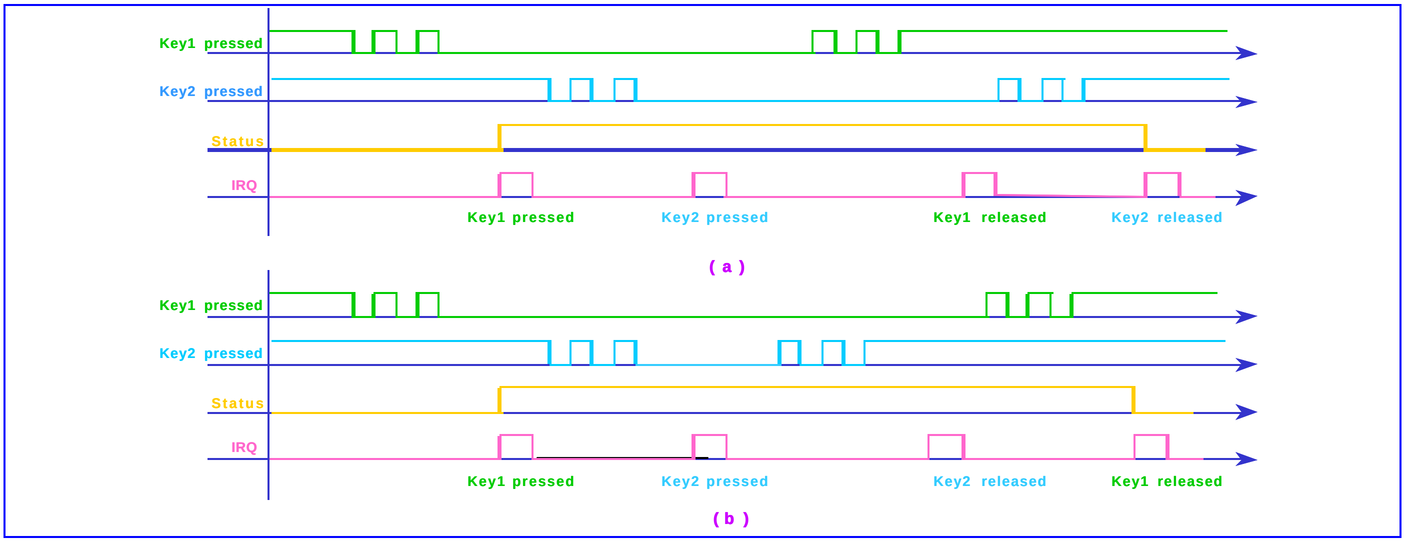

Figure 26 (a) Two keys pressed, case 1 **(b)** Two keys pressed, case 2

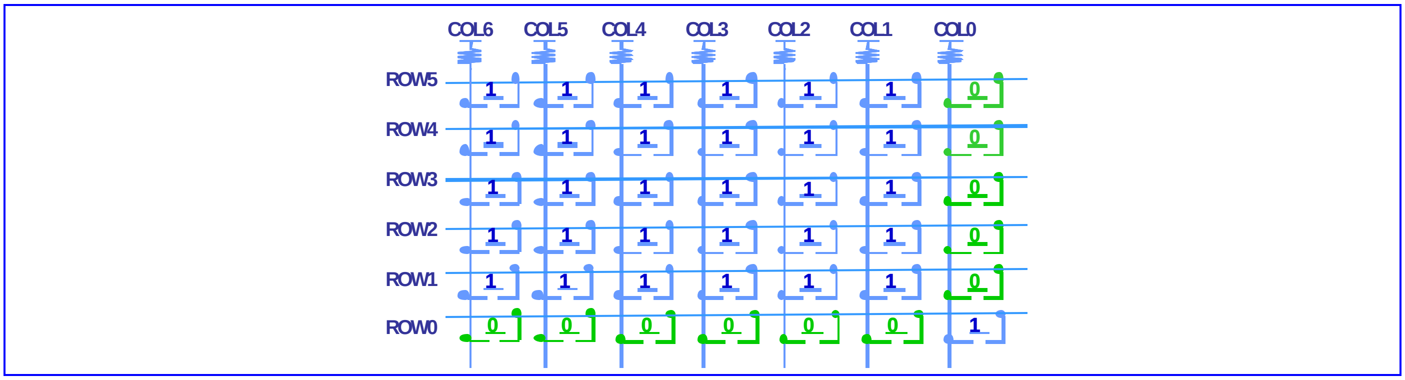

Figure 27 10 keys are detected at the same time

4.4.2 Register Definitions

KP +0000h Keypad status KP_STA

Bit	15	14	13	12	11	10	9	8	7	6	5	4	3	2	1	0
Name																STA
Type																RO
Reset																0

STA This register indicates the keypad status, and it won't be cleared by read.

0 No key pressed

1 Key pressed

KP +0004h Keypad scanning output, the lower 16 keys KP_LOW_KEY

Bit	15	14	13	12	11	10	9	8	7	6	5	4	3	2	1	0
Name	KEYS [15:0]															
Type	RO															
Reset	FFFFh															

KP +0008h Keypad scanning output, the medium 16 keys KP_MID_KEY

Bit	15	14	13	12	11	10	9	8	7	6	5	4	3	2	1	0
Name	KEYS [31:16]															
Type	RO															
Reset	FFFFh															

KP+000Ch Keypad scanning output, the higher 4 keys KP_HIGH_KEY

Bit	15	14	13	12	11	10	9	8	7	6	5	4	3	2	1	0
Name							KEYS[35:32]									
Type							RO									
Reset							3FFh									

These two registers list the status of 42 keys on the keypad. When the MCU receives the KEYPAD IRQ, both two registers must be read. If any key is pressed, the relative bit will be set to 0.

KEYS Status list of the 42 keys.

KP +00010h De-bounce period setting KP_DEBOUNCE

Bit	15	14	13	12	11	10	9	8	7	6	5	4	3	2	1	0
Name			DEBOUNCE [13:0]													
Type			R/W													
Reset			400h													

This register defines the waiting period before key press or release events are considering stale.

DEBOUNCE De-bounce time = KP_DEBOUNCE/32 ms.

4.5 General Purpose Inputs/Outputs

MT-6218B offers 48 general-purpose I/O pins and 3 general-purpose output pins. By setting the control registers, MCU software can control the direction, the output value and read the input values on these pins. Besides, these GPIOs and GPOs are multiplexed with other functionalities to reduce the pin count.

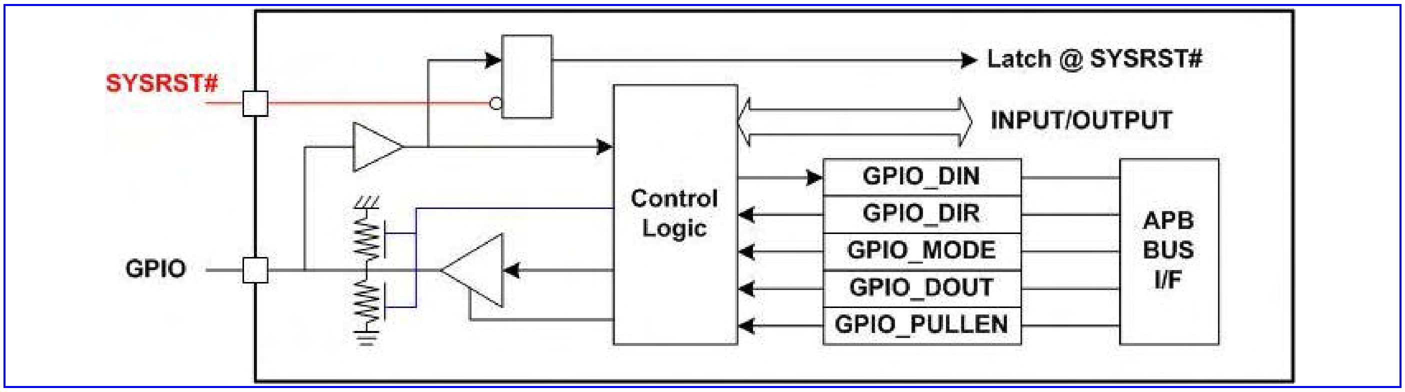

Figure 28 GPIO Block Diagram

GPIOs at RESET

At hardware reset (SYSRST#), GPIOs are all configured as inputs and the following alternative uses of GPIO pins are made:

- GPIO[41] is used as the **JMODE** input for JTAG mode selection
- GPIO[42] is used as the **MSIZE** input for boot rom size indication [1]

These GPIOs are used to latch the inputs at reset to memorize the wanted configuration to make sure that the system restarts or boots in the right mode.

Multiplexing of Signals on GPIO

The GPIO pins can be multiplexed with other signals.

- DAICLK, DAIPCMIN, DAIPCMOUT, DAIRST: digital audio interface for FTA
- BPI_BUS4, BPI_BUS5, BPI_BUS6, BPI_BUS7: radio hard-wire control
- BSI_CS1: additional chip select signal for radio 3-wire interface
- LCD_CS0#, LCD_CS1#, LCD_DATA, LCD_CLK, LCD_A0: serial display interface
- PWM1, PWM2: pulse width modulation signal
- UDSR1, UDTR1: hardware flow control signals for UART1
- URXD2, UTXD2, UCTS2, URTS2: data and flow control signals for UART2

Multiplexed of Signals on GPO

- SRCLKENA, SRCLKENAN: power on signal of the external VCXO LDO

4.5.1 Register Definitions

GPIO+0000h GPIO direction control register 1 GPIO_DIR1

Bit	15	14	13	12	11	10	9	8	7	6	5	4	3	2	1	0

[1] For detailed BOOT and MSIZE configuration, please see in Micro-Controller Unit System section

Name	GPIO15	GPIO14	GPIO13	GPIO12	GPIO11	GPIO10	GPIO9	GPIO8	GPIO7	GPIO6	GPIO5	GPIO4	GPIO3	GPIO2	GPIO1	GPIO0
Type	R/W	R/W	R/W	R/W	R/W	R/W	R/W	R/W	R/W	R/W	R/W	R/W	R/W	R/W	R/W	R/W
Reset	0	0	0	0	0	0	0	0	0	0	0	0	0	0	0	0

GPIO +0010h GPIO direction control register 2 GPIO_DIR2

Bit	15	14	13	12	11	10	9	8	7	6	5	4	3	2	1	0
Name	GPIO31	GPIO30	GPIO29	GPIO28	GPIO27	GPIO26	GPIO25	GPIO24	GPIO23	GPIO22	GPIO21	PGIO20	GPIO19	GPIO18	GPIO17	GPIO16
Type	R/W	R/W	R/W	R/W	R/W	R/W	R/W	R/W	R/W	R/W	R/W	R/W	R/W	R/W	R/W	R/W
Reset	0	0	0	0	0	0	0	0	0	0	0	0	0	0	0	0

GPIO+0020h GPIO direction control register 1 GPIO_DIR3

Bit	15	14	13	12	11	10	9	8	7	6	5	4	3	2	1	0
Name	GPIO47	GPIO46	GPIO45	GPIO44	GPIO43	GPIO42	GPIO41	GPIO40	GPIO39	GPIO38	GPIO37	GPIO36	GPIO35	GPIO34	GPIO33	GPIO32
Type	R/W	R/W	R/W	R/W	R/W	R/W	R/W	R/W	R/W	R/W	R/W	R/W	R/W	R/W	R/W	R/W
Reset	0	0	0	0	0	0	0	0	0	0	0	0	0	0	0	0

GPIO*n* GPIO direction control

- **0** GPIOs are configured as input
- **1** GPIOs are configured as output

GPIO +0030h GPIO pull-up/pull-down enable register 1 GPIO_PULLEN1

Bit	15	14	13	12	11	10	9	8	7	6	5	4	3	2	1	0
Name	GPIO15	GPIO14	GPIO13	GPIO12	GPIO11	GPIO10	GPIO9	GPIO8	GPIO7	GPIO6	GPIO5	GPIO4	GPIO3	GPIO2	GPIO1	GPIO0
Type	R/W	R/W	R/W	R/W	R/W	R/W	R/W	R/W	R/W	R/W	R/W	R/W	R/W	R/W	R/W	R/W
Reset	1	1	1	1	1	1	1	1	1	1	1	1	1	1	1	1

GPIO +0040h GPIO pull-up/pull-down enable register 2 GPIO_PULLEN2

Bit	15	14	13	12	11	10	9	8	7	6	5	4	3	2	1	0
Name	GPIO31	GPIO30	GPIO29	GPIO28	GPIO27	GPIO26	GPIO25	GPIO24	GPIO23	GPIO22	GPIO21	PGIO20	GPIO19	GPIO18	GPIO17	GPIO16
Type	R/W	R/W	R/W	R/W	R/W	R/W	R/W	R/W	R/W	R/W	R/W	R/W	R/W	R/W	R/W	R/W
Reset	1	1	1	1	1	1	1	1	1	1	1	1	1	1	1	1

GPIO+0050h GPIO pull-up/pull-down enable register 3 GPIO_PULLEN3

Bit	15	14	13	12	11	10	9	8	7	6	5	4	3	2	1	0
Name	GPIO47	GPIO46	GPIO45	GPIO44	GPIO43	GPIO42	GPIO41	GPIO40	GPIO39	GPIO38	GPIO37	GPIO36	GPIO35	GPIO34	GPIO33	GPIO32
Type	R/W	R/W	R/W	R/W	R/W	R/W	R/W	R/W	R/W	R/W	R/W	R/W	R/W	R/W	R/W	R/W
Reset	1	1	1	1	1	1	1	1	1	1	1	1	1	1	1	1

GPIO*n* GPIO direction control

- **0** GPIOs are configured as input
- **1** GPIOs are configured as output

GPIO +0060h Register GPIO_DINV1

Bit	15	14	13	12	11	10	9	8	7	6	5	4	3	2	1	0

Name	INV15	INV14	INV13	INV12	INV11	INV10	INV9	INV8	INV7	INV6	INV5	INV4	INV3	INV2	INV1	INV0
Type	R/W	R/W	R/W	R/W	R/W	R/W	R/W	R/W	R/W	R/W	R/W	R/W	R/W	R/W	R/W	R/W
Reset	0	0	0	0	0	0	0	0	0	0	0	0	0	0	0	0

GPIO +0070h Register GPIO_DINV2

Bit	15	14	13	12	11	10	9	8	7	6	5	4	3	2	1	0
Name	INV31	INV30	INV29	INV28	INV27	INV26	INV25	INV24	INV23	INV22	INV21	INV20	INV19	IVN18	INV17	INV16
Type	R/W	R/W	R/W	R/W	R/W	R/W	R/W	R/W	R/W	R/W	R/W	R/W	R/W	R/W	R/W	R/W
Reset	0	0	0	0	0	0	0	0	0	0	0	0	0	0	0	0

GPIO +0080h Register GPIO_DINV3

Bit	15	14	13	12	11	10	9	8	7	6	5	4	3	2	1	0
Name	INV47	INV46	INV45	INV44	INV43	INV42	INV41	INV40	INV39	INV38	INV37	INV36	INV35	INV34	INV33	INV32
Type	R/W	R/W	R/W	R/W	R/W	R/W	R/W	R/W	R/W	R/W	R/W	R/W	R/W	R/W	R/W	R/W
Reset	0	0	0	0	0	0	0	0	0	0	0	0	0	0	0	0

GPIO +0090h GPIO data output register 3 GPIO_DOUT1

Bit	15	14	13	12	11	10	9	8	7	6	5	4	3	2	1	0
Name	GPIO15	GPIO14	GPIO13	GPIO12	GPIO11	GPIO10	GPIO9	GPIO8	GPIO7	GPIO6	GPIO5	GPIO4	GPIO3	GPIO2	GPIO1	GPIO0
Type	R/W	R/W	R/W	R/W	R/W	R/W	R/W	R/W	R/W	R/W	R/W	R/W	R/W	R/W	R/W	R/W
Reset	0	0	0	0	0	0	0	0	0	0	0	0	0	0	0	0

GPIO +00A0h GPIO data output register 2 GPIO_DOUT2

Bit	15	14	13	12	11	10	9	8	7	6	5	4	3	2	1	0
Name	GPIO31	GPIO30	GPIO29	GPIO28	GPIO27	GPIO26	GPIO25	GPIO24	GPIO23	GPIO22	GPIO21	PGIO20	GPIO19	GPIO18	GPIO17	GPIO16
Type	R/W	R/W	R/W	R/W	R/W	R/W	R/W	R/W	R/W	R/W	R/W	R/W	R/W	R/W	R/W	R/W
Reset	0	0	0	0	0	0	0	0	0	0	0	0	0	0	0	0

GPIO +00B0h GPIO data output register 2 GPIO_DOUT3

Bit	15	14	13	12	11	10	9	8	7	6	5	4	3	2	1	0
Name	GPIO47	GPIO46	GPIO45	GPIO44	GPIO43	GPIO42	GPIO41	GPIO40	GPIO39	GPIO38	GPIO37	GPIO36	GPIO35	GPIO34	GPIO33	GPIO32
Type	R/W	R/W	R/W	R/W	R/W	R/W	R/W	R/W	R/W	R/W	R/W	R/W	R/W	R/W	R/W	R/W
Reset	0	0	0	0	0	0	0	0	0	0	0	0	0	0	0	0

GPIO +00C0h GPIO data Input register 1 GPIO_DIN1

Bit	15	14	13	12	11	10	9	8	7	6	5	4	3	2	1	0
Name	GPIO15	GPIO14	GPIO13	GPIO12	GPIO11	GPIO10	GPIO9	GPIO8	GPIO7	GPIO6	GPIO5	GPIO4	GPIO3	GPIO2	GPIO1	GPIO0
Type	R	R	R	R	R	R	R	R	R	R	R	R	R	R	R	R
Reset	X	X	X	X	X	X	X	X	X	X	X	X	X	X	X	X

GPIO +00D0h GPIO data Input register 2 GPIO_DIN2

Bit	15	14	13	12	11	10	9	8	7	6	5	4	3	2	1	0
Name	GPIO31	GPIO30	GPIO29	GPIO28	GPIO27	GPIO26	GPIO25	GPIO24	GPIO23	GPIO22	GPIO21	PGIO20	GPIO19	GPIO18	GPIO17	GPIO16
Type	R	R	R	R	R	R	R	R	R	R	R	R	R	R	R	R

Reset	X	X	X	X	X	X	X	X	X	X	X	X	X	X	X	X

GPIO +00E0h GPIO data Input register 3 GPIO_DIN3

Bit	15	14	13	12	11	10	9	8	7	6	5	4	3	2	1	0
Name	GPIO47	GPIO46	GPIO45	GPIO44	GPIO43	GPIO42	GPIO41	GPIO40	GPIO39	GPIO38	GPIO37	GPIO36	GPIO35	GPIO34	GPIO33	GPIO32
Type	R	R	R	R	R	R	R	R	R	R	R	R	R	R	R	R
Reset	X	X	X	X	X	X	X	X	X	X	X	X	X	X	X	X

GPIO +00F0h GPO data output register GPO_DOUT

Bit	15	14	13	12	11	10	9	8	7	6	5	4	3	2	1	0
Name														GPO2	GPO1	GPO0
Type														R/W	R/W	R/W
Reset														0	0	0

GPIO +0100h GPIO mode control register 1 GPIO_MODE1

Bit	15	14	13	12	11	10	9	8	7	6	5	4	3	2	1	0
Name	GPIO7_M		GPIO6_M		GPIO5_M		GPIO4_M		GPIO3_M		GPIO2_M		GPIO1_M		GPIO0_M	
Type	R/W		R/W		R/W		R/W		R/W		R/W		R/W		R/W	
Reset	00		00		00		00		00		00		00		00	

GPIO0_M GPIO mode selection

- **00** Configured as GPIO function
- **01** Reserved
- **10** DSP General Purpose Output 3
- **11** Reserved

GPIO1_M GPIO mode selection

- **00** Configured as GPIO function
- **01** DICK
- **10** Reserved
- **11** Reserved

GPIO2_M GPIO mode selection

- **00** Configured as GPIO function
- **01** DID
- **10** Reserved
- **11** Reserved

GPIO3_M GPIO mode selection

- **00** Configured as GPIO function
- **01** DIMS
- **10** Reserved
- **11** Reserved

GPIO4_M GPO mode selection

- **00** Configured as GPIO function
- **01** DSP Clock
- **10** DSP LPT Clock
- **11** MCU Tracer Data 4

GPIO5_M GPIO mode selection
- **00** Configured as GPIO function
- **01** AHB Clock
- **10** DSP LPT Data 3
- **11** MCU Tracer Data 3

GPIO6_M GPIO mode selection
- **00** Configured as GPIO function
- **01** MCU Clock
- **10** DSP LPT Data 2
- **11** MCU Tracer Data 2

GPIO7_M GPIO mode selection
- **00** Configured as GPIO function
- **01** Slow Clock
- **10** DSP LPT Data 1
- **11** MCU Tracer Data 1

GPIO +0110h GPIO mode control register 2 GPIO_MODE2

Bit	15	14	13	12	11	10	9	8	7	6	5	4	3	2	1	0
Name	GPIO15_M		GPIO14_M		GPIO13_M		GPIO12_M		GPIO11_M		GPIO10_M		GPIO9_M		GPIO8_M	
Type	R/W		R/W		R/W		R/W		R/W		R/W		R/W		R/W	
Reset	00		00		00		00		00		00		00		00	

GPIO8_M GPIO mode selection
- **00** Configured as GPIO function
- **01** Reserved
- **10** DSP LPT Data 0
- **11** MCU Tracer Data 0

GPIO9_M GPIO mode selection
- **00** Configured as GPIO function
- **01** Reserved
- **10** Reserved
- **11** MCU Tracer Re-Synchronization Signal

GPIO10_M GPIO mode selection
- **00** Configured as GPIO function
- **01** BPI_BUS6
- **10** Reserved
- **11** Reserved

GPIO11_M GPIO mode selection
- **00** Configured as GPIO function
- **01** BPI_BUS7
- **10** Reserved
- **11** Reserved

GPIO12_M GPIO mode selection
- **00** Configured as GPIO function
- **01** BPI_BUS8

10 13MHz Clock
11 6.5MHz Clock

GPIO13_M GPIO mode selection
00 Configured as GPIO function
01 BPI_BUS9
10 BSI_CS1
11 Reserved

GPIO14_M GPIO mode selection
00 Configured as GPIO function
01 MS/SD/MMC Card Insertion Signal
10 Reserved
11 Reserved

GPIO15_M GPIO mode selection
00 Configured as GPIO function
01 MS/SD/MMC Write Protection Signal
10 Reserved
11 Reserved

GPIO +0120h GPIO mode control register 3 GPIO_MODE3

Bit	15	14	13	12	11	10	9	8	7	6	5	4	3	2	1	0
Name	GPIO23_M		GPIO22_M		GPIO21_M		GPIO20_M		GPIO19_M		GPIO18_M		GPIO17_M		GPIO16_M	
Type	R/W		R/W		R/W		R/W		R/W		R/W		R/W		R/W	
Reset	00		00		00		00		00		00		00		00	

GPIO16_M GPIO mode selection
00 Configured as GPIO function
01 Serial LCD Interface/PM IC Interface Clock Signal
10 Reserved
11 TDMA Timer Uplink Frame Enable Signal

GPIO17_M GPIO mode selection
00 Configured as GPIO function
01 Serial LCD Interface Address/Data Signal
10 Reserved
11 TDMA Timer DIRQ Signal

GPIO18_M GPIO mode selection
00 Configured as GPIO function
01 Serial LCD Interface Data/PM IC Interface Data Signal
10 Reserved
11 TDMA Timer CTIRQ2 Signal

GPIO19_M GPIO mode selection
00 Configured as GPIO function
01 Serial LCD Interface/PM IC Interface Chip Select Signal 0
10 Reserved
11 TDMA Timer CTIRQ1 Signal

GPIO20_M GPIO mode selection

00 Configured as GPIO function
01 Serial LCD Interface Chip Select Signal 1
10 Parallel LCD Interface Chip Select Signal 2
11 TDMA Timer Event Validate Signal

GPIO21_M GPIO mode selection
00 Configured as GPIO function
01 PWM1
10 DSP General Purpose Output 1
11 TDMA Timer Uplink Frame Sync Signal

GPIO22_M GPIO mode selection
00 Configured as GPIO function
01 PWM2
10 DSP General Purpose Output 1
11 TDMA Timer Downlink Frame Enable Signal

GPIO23_M GPIO mode selection
00 Configured as GPIO function
01 Alerter
10 DSP General Purpose Output 2
11 TDMA Timer Downlink Frame Sync Signal

GPIO +0130h GPIO mode control register 4 GPIO_MODE4

Bit	15	14	13	12	11	10	9	8	7	6	5	4	3	2	1	0
Name	GPIO31_M		GPIO30_M		GPIO29_M		GPIO28_M		GPIO27_M		GPIO26_M		GPIO25_M		GPIO24_M	
Type	R/W		R/W		R/W		R/W		R/W		R/W		R/W		R/W	
Reset	00		00		00		00		00		00		00		00	

GPIO24_M GPIO mode selection
00 Configured as GPIO function
01 Parallel LCD Interface Chip Select Signal 1
10 DSP Task ID 0
11 MCU Bus Master ID 0

GPIO25_M GPIO mode selection
00 Configured as GPIO function
01 Nandflash Interface Ready/Busy Signal
10 DSP Task ID 1
11 MCU Bus Master ID 1

GPIO26_M GPIO mode selection
00 Configured as GPIO function
01 Nandflash Interface Command Latch Signal
10 DSP Task ID 2
11 MCU Bus Master ID 2

GPIO27_M GPIO mode selection
00 Configured as GPIO function
01 Nandflash Interface Address Latch Signal
10 DSP Task ID 3

11 MCU Bus Master ID 3

GPIO28_M GPIO mode selection

00 Configured as GPIO function

01 Nandflash Interface Write Strobe Signal

10 DSP Task ID 4

11 MCU Task ID Serial Data Output

GPIO29_M GPIO mode selection

00 Configured as GPIO function

01 Nandflash Interface Read Strobe Signal

10 DSP Task ID 5

11 MCU Task ID Frame Sync Signal

GPIO30_M GPIO mode selection

00 Configured as GPIO function

01 Nandflash Interface Chip Select Signal

10 DSP Task ID 6

11 MCU Task ID Clock Signal

GPIO31_M GPIO mode selection

00 Configured as GPIO function

01 VCXO Enable Signal Input

10 Reserved

11 Reserved

GPIO +0140h GPIO mode control register 5 GPIO_MODE5

Bit	15	14	13	12	11	10	9	8	7	6	5	4	3	2	1	0
Name	GPIO39_M		GPIO38_M		GPIO37_M		GPIO36_M		GPIO35_M		GPIO34_M		GPIO33_M		GPIO32_M	
Type	R/W		R/W		R/W		R/W		R/W		R/W		R/W		R/W	
Reset	00		00		00		00		00		00		00		00	

GPIO32_M GPIO mode selection

00 Configured as GPIO function

01 SIM Interface Voltage Select Signal

10 Reserved

11 Reserved

GPIO33_M GPIO mode selection

00 Configured as GPIO function

01 UART3 RXD Signal

10 Reserved

11 Reserved

GPIO34_M GPIO mode selection

00 Configured as GPIO function

01 UART3 TXD Signal

10 Reserved

11 Reserved

GPIO35_M GPIO mode selection

00 Configured as GPIO function

01 UART2 RXD Signal
10 UART3 CTS Signal
11 Reserved

GPIO36_M GPIO mode selection
00 Configured as GPIO function
01 UART2 TXD Signal
10 UART3 RTS Signal
11 Reserved

GPIO37_M GPIO mode selection
00 Configured as GPIO function
01 IrDA RXD Signal
10 UART2 CTS Signal
11 Reserved

GPIO38_M GPIO mode selection
00 Configured as GPIO function
01 IrDA TXD Signal
10 UART2 RTS Signal
11 Reserved

GPIO39_M GPIO mode selection
00 Configured as GPIO function
01 IrDA Power Down Control Signal
10 Reserved
11 Reserved

GPIO +0150h GPIO mode control register 6 GPIO_MODE6

Bit	15	14	13	12	11	10	9	8	7	6	5	4	3	2	1	0
Name	GPIO47_M		GPIO46_M		GPIO45_M		GPIO44_M		GPIO43_M		GPIO42_M		GPIO41_M		GPIO40_M	
Type	R/W		R/W		R/W		R/W		R/W		R/W		R/W		R/W	
Reset	00		00		00		00		00		00		00		00	

GPIO40_M GPIO mode selection
00 Configured as GPIO function
01 External Memory Interface Chip Select Signal 7
10 Reserved
11 Reserved

GPIO41_M GPIO mode selection
00 Configured as GPIO function
01 nIRQ Signal
10 6.5 MHz Clock Signal
11 13MHz Clock Signal

GPIO42_M GPIO mode selection
00 Configured as GPIO function
01 nFIQ signal
10 Reserved
11 Reserved

GPIO43_M GPIO mode selection

- **00** Configured as GPIO function
- **01** Digital Audio Interface Clock Output
- **10** TDMA Timer Debug Interface Clock Output
- **11** MCU Tracer Interface Clock Signal Output

GPIO44_M GPIO mode selection

- **00** Configured as GPIO function
- **01** Digital Audio Interface PCM Data Output
- **10** TDMA Timer Debug Interface Data Output 1
- **11** MCU Tracer Interface Synchronization Signal Output

GPIO45_M GPIO mode selection

- **00** Configured as GPIO function
- **01** Digital Audio Interface PCM Data Input
- **10** TDMA Timer Debug Interface Data Output 0
- **11** MCU Tracer Interface Data Output 7

GPIO46_M GPIO mode selection

- **00** Configured as GPIO function
- **01** Digital Audio Interface Synchronization Signal Output
- **10** BFE Debug Signal Output
- **11** MCU Tracer Interface Data Output 5

GPIO47_M GPIO mode selection

- **00** Configured as GPIO function
- **01** Digital Audio Interface Reset Signal Input
- **10** TDMA Timer Debug Interface Frame Sync Signal
- **11** MCU Tracer Interface Data Output 6

GPIO +0160h GPO mode control register 1 GPO_MODE1

Bit	15	14	13	12	11	10	9	8	7	6	5	4	3	2	1	0
Name											GPO2_M		GPO1_M		GPO0_M	
Type											R/W		R/W		R/W	
Reset											01		01		01	

GPO0_M GPO mode selection

- **00** Configured as GPO function
- **01** VCXO Enable Signal Output Active High
- **10** Reserved
- **11** Reserved

GPO1_M GPO mode selection

- **00** Configured as GPO function
- **01** VCXO Enable Signal Output Active Low
- **10** Reserved
- **11** Reserved

GPO2_M GPO mode selection

- **00** Configured as GPO function
- **01** External Memory Interface Power Down Control for Pseudo SRAM

10 Reserved

11 Reserved

4.6 General Purpose Timer

4.6.1 General Description

Two general-purpose timers, that are 16 bit long and runs independently with the same clock source are provided. Each timer can operate in two modes: one-shot mode and auto-repeat mode. In one-shot mode, when the timer counts down and reaches zero, it is halted. In auto-repeat mode, as the timer reaches zero, it will simply reset and continue counting backward until the disable signal is set to be one. If the initial counting value (i.e. GPTIMER1_DAT for GPT1 or GPTIMER_DAT2 for GPT2) is written when the timer is running, no matter which mode it is, there is no effect until the next time the timer is restarted. Hence, be sure to set the destined values for GPTIMER_DAT and the GPTIMER_PRESCALER registers before enable the gptimer.

4.6.2 Register Definitions

GPT +0000h GPT1 Control register GPTIMER1_CON

Bit	15	14	13	12	11	10	9	8	7	6	5	4	3	2	1	0
Name	EN	MODE														
Type	R/W	R/W														
Reset	0	0														

MODE This register controls GPT1 to count repeatedly or just one-shot

0 One-shot mode is selected

1 Auto-repeat mode is selected

EN This register controls GPT1 starts to count or disables it

0 GPT1 is disabled

1 GPT1 is enabled

GPT +0004h GPT1 Time-Out Interval register GPTIMER1_DAT

Bit	15	14	13	12	11	10	9	8	7	6	5	4	3	2	1	0
Name	CNT [15:0]															
Type	R/W															
Reset	FFFFh															

CNT [15:0] Initial counting value. GPT1 will count down from GPTIMER1_DAT. When GPT1 counts down to zero, interrupt of GPT1 will be generated.

GPT +0008h GPT2 Control register GPTIMER2_CON

Bit	15	14	13	12	11	10	9	8	7	6	5	4	3	2	1	0
Name	EN	MODE														
Type	R/W	R/W														
Reset	0	0														

MODE This register controls GPT2 to count repeatedly or just one-shot

0 One-shot mode is selected

1 Auto-repeat mode is selected

EN This register controls GPT2 starts to count or disables it

0 GPT2 is disabled

1 GPT2 is enabled

GPT +000Ch GPT2 Time-Out Interval register GPTIMER2_DAT

Bit	15	14	13	12	11	10	9	8	7	6	5	4	3	2	1	0
Name	CNT [15:0]															
Type	R/W															
Reset	FFFFh															

CNT [15:0] Initial counting value. GPT2 will count down from GPTIMER2_DAT. When GPT2 counts down to zero, interrupt of GPT2 will be generated.

GPT +0010h GPT Status register GPTIMER_STA

Bit	15	14	13	12	11	10	9	8	7	6	5	4	3	2	1	0
Name															GPT2	GPT1
Type															RC	RC
Reset															0	0

This register is for illustrating of the gptimer time out status. Each flag is set when the corresponding counter countdown finished, and can be cleared when the CPU reads the status register.

GPT +0014h GPT1 Prescaler register GPTIMER1_PRESCALER

Bit	15	14	13	12	11	10	9	8	7	6	5	4	3	2	1	0
Name														PRESCALER [2:0]		
Type														R/W		
Reset														100b		

PRESCALER This register controls the gptimer1 counting clock

000 16K Hz

001 8K Hz

010 4K Hz

011 2K Hz

100 1K Hz

101 500Hz

110 250Hz

111 125Hz

GPT +0018h GPT2 Prescaler register GPTIMER2_PRESCALER

Bit	15	14	13	12	11	10	9	8	7	6	5	4	3	2	1	0
Name														PRESCALER [2:0]		
Type														R/W		
Reset														100b		

PRESCALER This register controls the gptimer2 counting clock

000 16K Hz

001 8K Hz

010 4K Hz
011 2K Hz
100 1K Hz
101 500Hz
110 250Hz
111 125Hz

GPT+001Ch GPT3 Control register GPTIMER3_CON

Bit	15	14	13	12	11	10	9	8	7	6	5	4	3	2	1	0
Name																EN
Type																R/W
Reset																0

EN This register controls GPT3 starts to count or disables it

0 GPT3 is disabled

1 GPT3 is enabled

GPT+0020h GPT3Time-Out Interval register GPTIMER_DAT3

Bit	15	14	13	12	11	10	9	8	7	6	5	4	3	2	1	0
Name	CNT[15:0]															
Type	RO															
Reset	0															

CNT [15:0] GPT3 is a free run timer if EN = 1. Software will read this register to count the time interval needed.

GPT+0024h GPT3 Prescaler register GPTIMER3_PRESCALER

Bit	15	14	13	12	11	10	9	8	7	6	5	4	3	2	1	0
Name																
Type	R/W	R/W	R/W	R/W	R/W	R/W	R/W	R/W	R/W	R/W	R/W	R/W	R/W	R/W	R/W	R/W
Reset	0	0	0	0	0	0	0	0	0	0	0	0	0	0	0	0

PRESCALER This register controls the gptimer3 counting clock

000 16K Hz
001 8K Hz
010 4K Hz
011 2K Hz
100 1K Hz
101 500Hz
110 250Hz
112 125Hz

4.7 UART

4.7.1 General Description

The MT6218B houses three UARTs. The UARTs provide full duplex serial communication channels between the MT6218B and external devices.

The UART has M16C450 and M16550A modes of operation, which are compatible with a range of standard software drivers. The extensions have been designed to be broadly software compatible with 16550A variants, but there are some areas where there is no consensus.

In common with the M16550A, the UART supports word lengths from five to eight bits, an optional parity bit and one or two stop bits, and is fully programmable by an 8-bit CPU interface. A 16-bit programmable baud rate generator and an 8-bit scratch register are included, together with separate transmit and receive FIFOs. Eight modem control lines and a diagnostic loop-back mode are provided. The UART also includes two DMA handshake lines, which are used to indicate when the FIFOs are ready to transfer data to the CPU. Interrupts can be generated from any of 10 sources.

Note: The UART has been designed so that all internal operations are synchronized by the CLK signal. This results in minor timing differences between the UART and the industry standard 16550A device, which mean that the core is not clock for clock identical to the original device.

After a hardware reset, the UART is in M16C450 mode. It can then have its FIFOs enabled and enter M16550A mode. The UART then adds further functionality beyond M16550A mode. Each of the extended functions can be selected individually under software control.

The UART provides more powerful enhancements than the industry-standard 16550:

- Hardware flow control. This is a very useful feature when the ISR latency is hard to predict and control in the embedded applications. It relieves the MCU from having to fetch the received data within a fixed amount of time.
- Output of an IR-compatible electrical pulse with a width 3/16 of that of a regular bit period.

Note: In order to enable any of the enhancements, the Enhanced Mode bit, EFR[4], has to be set. If EFR[4] is not set, it is not possible to write to IER[7:5], FCR[5:4], ISR[5:4] and MCR[7:6]. This is to ensure that the UART is backward compatible for software that has been written for 16C450 and 16550A devices.

Figure 29 shows the block diagram of the 6218B UART device.

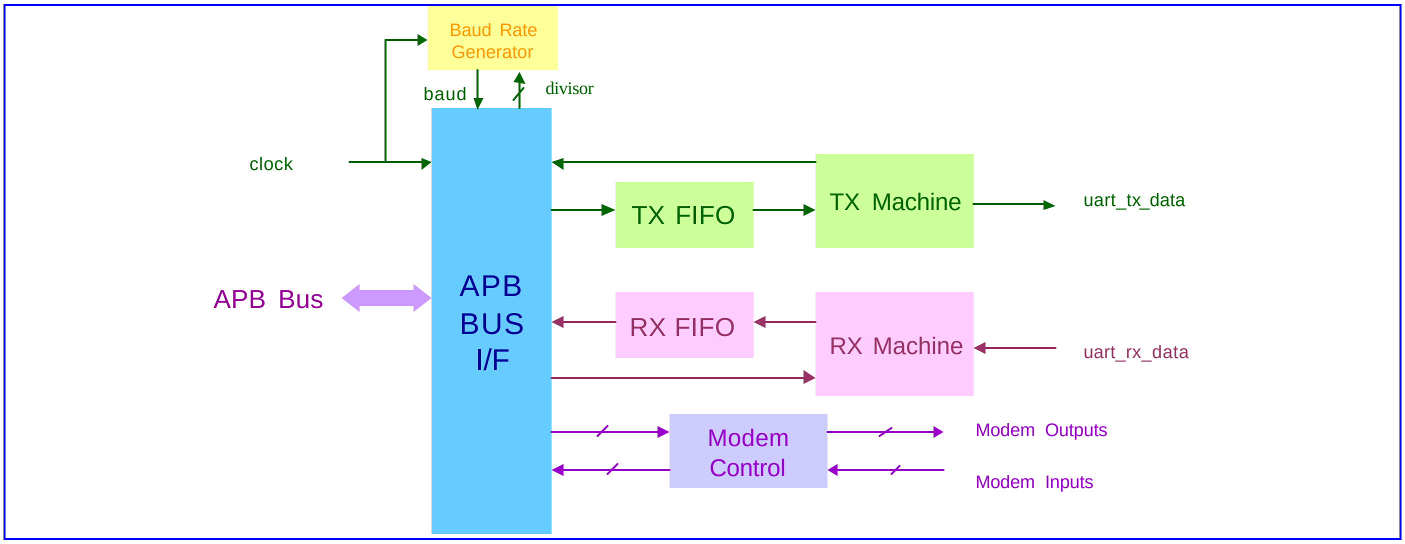

Figure 29 Block Diagram of UART

4.7.2 Register Definitions

n = 1, 2, 3; for uart1, uart2 and uart3 respectively.

UARTn+0000h RX Buffer Register UART_RBR

Bit	15	14	13	12	11	10	9	8	7	6	5	4	3	2	1	0
Name									RBR[7:0]							
Type									R							

RBR RX Buffer Register. This is a read-only register. The received data can be read by accessing this register.
Modified when LCR[7] = 0.

UARTn+0000h TX Holding Register UART_THR

Bit	15	14	13	12	11	10	9	8	7	6	5	4	3	2	1	0
Name									THR[7:0]							
Type									W							

THR TX Holding Register. This is a write-only register. The data to be transmitted is written to this register, and then sent to PC via serial communication.
Modified when LCR[7] = 0.

UARTn+0004h Interrupt Enable Register UART_IER

Bit	15	14	13	12	11	10	9	8	7	6	5	4	3	2	1	0
Name									CTSI	RTSI	XOFFI	X	EDSSI	ELSI	ETBEI	ERBFI
Type									R/W							
Reset									0							

IER By storing a ‘1’ to a specific bit position, the interrupt associated with that bit is enabled. Otherwise, the interrupt is disabled.
IER[3:0] are modified when LCR[7] = 0.
IER[7:4] are modified when LCR[7] = 0 & EFR[4] = 1.

CTSI Masks an interrupt that is generated when a rising edge is detected on the CTS modem control line.
Note: This interrupt is only enabled when hardware flow control is enabled
- **0** Un-mask an interrupt that is generated when a rising edge is detected on the CTS modem control line.
- **1** Mask an interrupt that is generated when a rising edge is detected on the CTS modem control line.

RTSI Masks an interrupt that is generated when a rising edge is detected on the RTS modem control line.
Note: This interrupt is only enabled when hardware flow control is enabled
- **0** Un-mask an interrupt that is generated when a rising edge is detected on the RTS modem control line
- **1** Mask an interrupt that is generated when a rising edge is detected on the RTS modem control line.

XOFFI Masks an interrupt that is generated when an XOFF character is received.
Note: This interrupt is only enabled when software flow control is enabled
- **0** Un-mask an interrupt that is generated when an XOFF character is received.
- **1** Mask an interrupt that is generated when an XOFF character is received.

EDSSI When set ("1"), an interrupt is generated if DDCD, TERI, DDSR or DCTS (MSR[4:1]) becomes set.
- **0** No interrupt is generated if DDCD, TERI, DDSR or DCTS (MSR[4:1]) becomes set.
- **1** An interrupt is generated if DDCD, TERI, DDSR or DCTS (MSR[4:1]) becomes set.

ELSI When set ("1"), an interrupt is generated if BI, FE, PE or OE (LSR[4:1]) becomes set.
- **0** No interrupt is generated if BI, FE, PE or OE (LSR[4:1]) becomes set.
- **1** An interrupt is generated if BI, FE, PE or OE (LSR[4:1]) becomes set.

ETBEI When set ("1"), an interrupt is generated if the TX Holding Register is empty or the contents of the TX FIFO have been reduced to its Trigger Level.

0 No interrupt is generated if the TX Holding Register is empty or the contents of the TX FIFO have been reduced to its Trigger Level

1 An interrupt is generated if the TX Holding Register is empty or the contents of the TX FIFO have been reduced to its Trigger Level

ERBFI When set ("1"), an interrupt is generated if the RX Buffer contains data.

0 No interrupt is generated if the RX Buffer contains data.

1 An interrupt is generated if the RX Buffer contains data.

UARTn+0008h Interrupt Identification Register UART_IIR

Bit	15	14	13	12	11	10	9	8	7	6	5	4	3	2	1	0
Name									FIFOE		ID4	ID3	ID2	ID1	ID0	NINT
Type									R							
Reset									0	0	0	0	0	0	0	1

IIR Identify if there are pending interrupts; ID4 and ID3 will present only when EFR[4] = 1.

The following table gives the IIR[5:0] codes associated with the possible interrupts:

IIR[5:0]	Priority Level	Interrupt	Source
000001	-	No interrupt pending	
000110	1	Line Status Interrupt	BI, FE, PE or OE set in LSR
000100	2	RX Data Received	RX Data received or RX Trigger Level reached.
001100	2	RX Data Timeout	Timeout on character in RX FIFO.
000010	3	TX Holding Register Empty	TX Holding Register empty or TX FIFO Trigger Level reached.
000000	4	Modem Status change	DDCD, TERI, DDSR or DCTS set in MSR
010000	5	Software Flow Control	XOFF Character received
100000	6	Hardware Flow Control	CTS or RTS Rising Edge

Table 20 The IIR[5:0] codes associated with the possible interrupts

Line Status Interrupt: A RX Line Status Interrupt (IIR[5:0] == 000110b) is generated if ELSI (IER[2]) is set and any of BI, FE, PE or OE (LSR[4:1]) becomes set. It's cleared by reading the Line Status Register.

RX Data Received Interrupt: A RX Received interrupt (IER[5:0] == 000100b) is generated if EFRBI (IER[0]) is set and either RX Data is placed in the RX Buffer Register or the RX Trigger Level is reached. It's cleared by reading the RX Buffer Register or the RX FIFO (if enabled).

RX Data Timeout Interrupt:

When virtual FIFO mode is disabled, RX Data Timeout Interrupt is generated if all the following apply:

1. There is at least one character in the FIFO
2. The most recent character was received longer than four character periods ago. (inclusive of all start, parity and stop bits)
3. The most recent CPU read of the FIFO was longer than four character periods ago.

The timeout timer is restarted on receipt of a new bye from the RX Shift Register, or on a CPU read from the RX FIFO.

The RX Data Timeout Interrupt is enabled by setting EFRBI (IER[0]) to "1", and it's cleared by reading RX FIFO.

When virtual FIFO mode is enabled, RX Data Timeout Interrupt is generated if all the following apply:

1. There is no character in the FIFO
2. The most recent character was received longer than four character periods ago. (inclusive of all start, parity and stop bits)
3. The most recent CPU read of the FIFO was longer than four character periods ago.

The timeout timer is restarted on receipt of a new byte from the RX Shift Register.

The RX Holding Register Empty Interrupt: A TX Holding Register Empty Interrupt (IIR[5:0] = 000010b) is generated if ETRBI (IER[1]) is set and either the TX Holding Register or, if FIFOs are enabled, the TX FIFO becomes empty. It's cleared by writing to the TX Holding Register or TX FIFO if FIFO enabled.

Modem Status Change Interrupt: A Modem Status Change Interrupt (IIR[5:0] = 000000b) is generated if EDSSI (IER[3]) is set and either DDCD, TERI, DDSR or DCTS (MSR[3:0]) becomes set. It's cleared by reading the Modem Status Register.

Software Flow Control Interrupt: A Software Flow Control Interrupt (IIR[5:0] = 010000b) is generated if Software Flow Control is enabled and XOFFI (IER[5]) becomes set, indicating that an XOFF character has been received. It's cleared by reading the Interrupt Identification Register.

Hardware Flow Control Interrupt: A Hardware Flow Control Interrupt (IER[5:0] = 100000b) is generated if Hardware Flow Control is enabled and either RTSI (IER[6]) or CTSI (IER[7]) becomes set indicating that a rising edge has been detected on either the RTS/CTS Modem Control line. It's cleared by reading the Interrupt Identification Register.

UARTn+0008h FIFO Control Register UART_FCR

Bit	15	14	13	12	11	10	9	8	7	6	5	4	3	2	1	0
Name									RFTL1	RFTL0	TFTL1	TFTL0	DMA1	CLRT	CLRR	FIFOE
Type									W							

FCR FCR is used to control the trigger levels of the FIFOs, or flush the FIFOs.
FCR[7:6] is modified when LCR != BFh
FCR[5:4] is modified when LCR != BFh & EFR[4] = 1
FCR[4:0] is modified when LCR != BFh

FCR[7:6] RX FIFO trigger threshold
0 1
0 6
1 12
2 22

FCR[5:4] TX FIFO trigger threshold
0 1
1 4
2 8
3 14

DMA1 This bit determines the DMA mode, which the TXRDY and RXRDY pins support. TXRDY and RXRDY act to support single-byte transfers between the UART and memory (DMA mode 0) or multiple byte transfers (DMA mode1). Note that this bit has no effect unless the FIFOE bit is set as well
0 The device operates in DMA Mode 0.
1 The device operates in DMA Mode 1.

TXRDY – mode0: Goes active (low) when the TX FIFO or the TX Holding Register is empty. Becomes inactive when a byte is written to the Transmit channel.

TXRDY – mode1: Goes active (low) when there are no characters in the TX FIFO. Becomes inactive when the TX FIFO is full.

RXRDY – mode0: Becomes active (low) when there is at least one character in the RX FIFO or the RX Buffer Register is full. It becomes inactive when there are no more characters in the RX FIFO or RX Buffer register.

RXRDY – mode1: Becomes active (low) when the RX FIFO Trigger Level reached or an RX FIFO Character Timeout occurs. It goes inactive when the RX FIFO is empty.

CLRT Clear Transmit FIFO. This bit is self-clearing.

0 Leave TX FIFO intact.

1 Clear all the bytes in the TX FIFO.

CLRR Clear Receive FIFO. This bit is self-clearing.

0 Leave RX FIFO intact.

1 Clear all the bytes in the RX FIFO.

FIFOE FIFO Enabled. This bit must be a 1 for any of the other bits in the registers to have any effect.

0 Disable both the RX and TX FIFOs.

1 Enable both the RX and TX FIFOs.

UARTn+000Ch Line Control Register UART_LCR

Bit	15	14	13	12	11	10	9	8	7	6	5	4	3	2	1	0
Name									DLAB	SB	SP	EPS	PEN	STB	WLS1	WLS0
Type									R/W							
Reset									0	0	0	0	0	0	0	0

LCR Line Control Register. Determine characteristics of serial communication signals

Modified when LCR[7] = 0.

DLAB Divisor Latch Access Bit.

0 The RX and TX Registers are read/written at Address 0 and the IER register is read/written at Address 4.

1 The Divisor Latch LS is read/written at Address 0 and the Divisor Latch MS is read/written at Address 4.

SB Set Break

0 No effect

1 SOUT signal is forced into the “0” state.

SP Stick Parity

0 No effect.

1 The Parity bit is forced into a defined state, dependent upon state of EPS and PEN:

If EPS = "1" & PEN = "1", the Parity bit is set and checked = "0".

If EPS = "0" & PEN = "1", the Parity bit is set and checked = "1".

EPS Even Parity Select

0 When EPS=”0”, an odd number of ones is sent and checked.

1 When EPS=”1”, an even number of ones is sent and checked.

PEN Parity Enable

0 The Parity is neither transmitted nor checked

1 The Parity is transmitted and checked.

STB Number of Stop Bits

0 One STOP bit is always added.

1 Two STOP bits are added after each character is sent; unless the character length is 5 when 1 STOP bit is added.

WLS1, 0 Word Length Select.

0 5 bits.

1 6 bits

2 7 bits

3 8 bits

UARTn+0010h Modem Control Register UART_MCR

Bit	15	14	13	12	11	10	9	8	7	6	5	4	3	2	1	0
Name									XOFF STATUS	IR ENABLE	X	LOOP	OUT2	OUT1	RTS	DTR
Type									R/W							
Reset									0	0	0	0	0	0	0	0

MCR Modem Control Register. Control interface signals of the UART.

MCR[4:0] are modified when LCR[7] = 0,

MCR[7:6] are modified when LCR[7] = 0 & EFR[4] = 1.

XOFF Status This is a read-only bit.

0 When an XON character is received.

1 When an XOFF character is received.

IR Enable Enable IrDA modulation/demodulation.

0 Disable IrDA modulation/demodulation.

1 Enable IrDA modulation/demodulation.

LOOP Loop-back control bit

0 No loop-back is enabled

1 Loop-back mode is enabled

OUT2 Control the state of the output NOUT2, even in loop mode.

0 NOUT2=”1”.

1 NOUT2=”0”.

OUT1 Control the state of the output NOUT1, even in loop mode.

0 NOUT1=”1”.

1 NOUT1=”0”.

RTS Control the state of the output NRTS, even in loop mode.

0 NRTS=”1”.

1 NRTS=”0”.

DTR Control the state of the output NDTR, even in loop mode.

0 NDTR=”1”.

1 NDTR=”0”.

UARTn+0014h Line Status Register UART_LSR

Bit	15	14	13	12	11	10	9	8	7	6	5	4	3	2	1	0
Name									FIFOERR	TEMT	THRE	BI	FE	PE	OE	DR
Type									R/W							
Reset									0	1	1	0	0	0	0	0

LSR Line Status Register.

Modified when LCR[7] = 0.

FIFOERR RX FIFO Error Indicator.

- **0** No PE, FE, BI set in the RX FIFO.
- **1** Set to 1 when there is at least one PE, FE or BI in the RX FIFO.

TEMT TX Holding Register (or TX FIFO) and the TX Shift Register are empty.

- **0** Empty conditions below are not met.
- **1** If FIFOs are enabled, the bit is set whenever the TX FIFO and the TX Shift Register are empty. If FIFOs are disabled, the bit is set whenever TX Holding Register and TX Shift Register are empty.

THRE Indicate if there is room for TX Holding Register or TX FIFO is reduced to its Trigger Level.

- **0** When at least one byte is written to the TX FIFO or the TX Shift Register.
- **1** Set whenever the contents of the TX FIFO are reduced to its Trigger Level (FIFOs are enabled), or whenever TX Holding Register is empty and ready to accept new data (FIFOs are disabled.)

BI Break Interrupt.

- **0** Reset by the CPU reading this register
- **1** If the FIFOs are disabled, this bit is set whenever the SIN is held in the 0 state for more than one transmission time (START bit + DATA bits + PARITY + STOP bits).

  If the FIFOs are enabled, this error is associated with a corresponding character in the FIFO and is flagged when this byte is at the top of the FIFO. When a break occurs, only one zero character is loaded into the FIFO: the next character transfer is enabled when SIN goes into the marking state and receives the next valid start bit.

FE Framing Error.

- **0** Reset by the CPU reading this register
- **1** If the FIFOs are disabled, this bit is set if the received data did not have a valid STOP bit. If the FIFOs are enabled, the state of this bit is revealed when the byte it refers to is the next to be read.

PE Parity Error

- **0** Reset by the CPU reading this register
- **1** If the FIFOs are disabled, this bit is set if the received data did not have a valid parity bit. If the FIFOs are enabled, the state of this bit is revealed when the byte it refers to is the next to be read.

OE Overrun Error

- **0** Reset by the CPU reading this register
- **1** If the FIFOs are disabled, this bit is set if the RX Buffer was not read by the CPU before new data from the RX Shift Register overwrote the previous contents.

If the FIFOs are enabled, an overrun error occurs when the RX FIFO is full and the RX Shift Register becomes full. OE is set as soon as this happens. The character in the Shift Register is then overwritten, but it is not transferred to the FIFO.

DR Data Ready.

- **0** Cleared by the CPU reading the RX Buffer or by reading all the FIFO bytes.
- **1** Set by the RX Buffer becoming full or by a byte being transferred into the FIFO.

UARTn+0018h Modem Status Register UART_MSR

Bit	15	14	13	12	11	10	9	8	7	6	5	4	3	2	1	0
Name									DCD	RI	DSR	CTS	DDCD	TERI	DDSR	DCTS
Type									R/W	R/W	R/W	R/W	R/W	R/W	R/W	R/W
Reset									Input	Input	Input	Input	0	0	0	0

Note: After reset, D4-D7 are inputs. A modem status interrupt can be cleared by writing '0' or set by writing '1' to this register. D0-D3 can be written to.

Modified when LCR[7] = 0.

MSR Modem Status Register

DCD Data Carry Detect.

When Loop = "0", this is the complement of the NDCD input signal.

When Loop = "1", this is equal to the OUT2 bit in the Modem Control Register.

RI Ring Indicator.

When Loop = "0", this is the complement of the NRI input signal.

When Loop = "1", this is equal to the OUT1 bit in the Modem Control Register.

DSR Data Set Ready

When Loop = "0", this is the complement of the NDSR input signal.

When Loop = "1", this is equal to the DTR bit in the Modem Control Register.

CTS Clear To Send.

When Loop = "0", this is the complement of the NCTS input signal.

When Loop = "1", this is equal to the RTS bit in the Modem Control Register.

DDCD Delta Data Carry Detect.

- **0** The state of DCD has not changed since the Modem Status Register was last read
- **1** Set if the state of DCD has changed since the Modem Status Register was last read.

TERI Trailing Edge Ring Indicator

- **0** The NRI input does not change since this register was last read.
- **1** Set if the NRI input changes from "0" to "1" since this register was last read.

DDSR Delta Data Set Ready

- **0** Cleared if the state of DSR has not changed since this register was last read.
- **1** Set if the state of DSR has changed since this register was last read.

DCTS Delta Clear To Send

- **0** Cleared if the state of CTS has not changed since this register was last read.
- **1** Set if the state of CTS has changed since this register was last read.

UARTn+001Ch Scratch Register UART_SCR

Bit	15	14	13	12	11	10	9	8	7	6	5	4	3	2	1	0
Name									SCR[7:0]							
Type									R/W							

A general purpose read/write register. After reset, its value is un-defined.

Modified when LCR[7] = 0.

UARTn+0000h Divisor Latch (LS) UART_DLL

Bit	15	14	13	12	11	10	9	8	7	6	5	4	3	2	1	0
Name									DLL[7:0]							
Type									R/W							

MediaTek Inc. Confidential

Reset									1

UARTn+0004h Divisor Latch (MS) UART_DLM

Bit	15	14	13	12	11	10	9	8	7	6	5	4	3	2	1	0
Name									DLL[7:0]							
Type									R/W							
Reset									0							

Note: DLL & DLM can only be updated if DLAB is set (“1”). Note too that division by 1 generates a BAUD signal that is constantly high.

Modified when LCR[7] = 1.

The table below shows the divisor needed to generate a given baud rate from CLK inputs of 13, 26MHz and 52MHz. The effective clock enable generated is 16 x the required baud rate.

BAUD	13MHz	26MHz	52MHz
110	7386	14773	29545
300	2708	5417	10833
1200	677	1354	2708
2400	338	677	1354
4800	169	339	677
9600	85	169	339
19200	42	85	169
38400	21	42	85
57600	14	28	56
115200	6	14	28

Table 2 Divisor needed to generate a given baud rate

UARTn+0008h Enhanced Feature Register UART_EFR

Bit	15	14	13	12	11	10	9	8	7	6	5	4	3	2	1	0
Name									AUTO CTS	AUTO RTS	D5	ENABLE-E	SW FLOW CONT[3:0]			
Type									R/W	R/W	R/W	R/W	R/W			
Reset									0	0	0	0	0			

*NOTE: Only when LCR=BF’h

Auto CTS Enables hardware transmission flow control

- **0** Disabled.
- **1** Enabled.

Auto RTS Enables hardware reception flow control

- **0** Disabled.
- **1** Enabled.

Enable-E Enable enhancement features.

- **0** Disabled.
- **1** Enabled.

CONT[3:0] Software flow control bits.

00xx No TX Flow Control
10xx Transmit XON1/XOFF1 as flow control bytes
01xx Transmit XON2/XOFF2 as flow control bytes
11xx Transmit XON1 & XON2 and XOFF1 & XOFF2 as flow control words
xx00 No RX Flow Control
xx10 Receive XON1/XOFF1 as flow control bytes
xx01 Receive XON2/XOFF2 as flow control bytes
xx11 Receive XON1 & XON2 and XOFF1 & XOFF2 as flow control words

UARTn+0010h XON1 — UART_XON1

Bit	15	14	13	12	11	10	9	8	7	6	5	4	3	2	1	0
Name									XON1[7:0]							
Type									R/W							
Reset									0							

UARTn+0014h XON2 — UART_XON2

Bit	15	14	13	12	11	10	9	8	7	6	5	4	3	2	1	0
Name									XON2[7:0]							
Type									R/W							
Reset									0							

UARTn+0018h XOFF1 — UART_XOFF1

Bit	15	14	13	12	11	10	9	8	7	6	5	4	3	2	1	0
Name									XOFF1[7:0]							
Type									R/W							
Reset									0							

UARTn+001Ch XOFF2 — UART_XOFF2

Bit	15	14	13	12	11	10	9	8	7	6	5	4	3	2	1	0
Name									XOFF2[7:0]							
Type									R/W							
Reset									0							

*Note: XON1, XON2, XOFF1, XOFF2 are valid only when LCR=BFh.

UARTn+0020h AUTOBAUD_EN — AUTOBAUD_EN

Bit	15	14	13	12	11	10	9	8	7	6	5	4	3	2	1	0
Name																AUTO_EN
Type																R/W
Reset																0

AUTOBAUD_EN Auto-baud enable signal
0 Auto-baud function disable
1 Auto-baud function enable

UARTn+0024h HIGH SPEED UART — HIGHSPEED

Bit	15	14	13	12	11	10	9	8	7	6	5	4	3	2	1	0

MediaTek Inc. Confidential

Name															SPEED [1:0]
Type															R/W
Reset															0

SPEED UART sample counter base

- **0** bases on 16*baud_pulse, baud_rate = system clock frequency/16/{DLH, DLL}
- **1** bases on 8*baud_pulse, baud_rate = system clock frequency/8/{DLH, DLL}
- **2** bases on 4*baud_pulse, baud_rate = system clock frequency/4/{DLH, DLL}
- **3** bases on sampe_count * baud_pulse, baud_rate = system clock frequency / sampe_count

The table below shows the divisor needed to generate a given baud rate from CLK inputs of 13MHz bases on different HIGHSPEED value.

BAUD	HIGHSPEED = 0	HIGHSPEED = 1	HIGHSPEED = 2
110	7386	14773	29545
300	2708	7386	14773
1200	677	2708	7386
2400	338	677	2708
4800	169	338	677
9600	85	169	338
19200	42	85	169
38400	21	42	85
57600	14	21	42
115200	7	14	21
230400	*	7	14
460800	*	*	7
921600	*	*	*

Table 21 Divisor needed to generate a given baud rate from 13MHz based on different HIGHSPEED value

The table below shows the divisor needed to generate a given baud rate from CLK inputs of 26MHz bases on different HIGHSPEED value.

BAUD	HIGHSPEED = 0	HIGHSPEED = 1	HIGHSPEED = 2
110	14773	29545	59091
300	5417	14773	29545
1200	1354	5417	14773
2400	677	1354	5417
4800	339	677	1354
9600	169	339	667
19200	85	169	339
38400	42	85	169
57600	28	42	85

MediaTek Inc. Confidential

115200	14	28	42
230400	7	14	28
460800	*	7	14
921600	*	*	7

Table 22 Divisor needed to generate a given baud rate from 26MHz based on different HIGHSPEED value

The table below shows the divisor needed to generate a given baud rate from CLK inputs of 52MHz bases on different HIGHSPEED value.

BAUD	HIGHSPEED = 0	HIGHSPEED = 1	HIGHSPEED = 2
110	29545	59091	118182
300	10833	29545	59091
1200	2708	10833	29545
2400	1354	2708	10833
4800	677	1354	2708
9600	339	677	1354
19200	169	339	677
38400	85	169	339
57600	56	85	169
115200	28	56	85
230400	14	28	56
460800	7	14	28
921600	*	7	14

Table 4 Divisor needed to generate a given baud rate from 52MHz based on different HIGHSPEED value

UARTn+0028h SAMPLE_COUNT SAMPLE_COUNT

Bit	15	14	13	12	11	10	9	8	7	6	5	4	3	2	1	0
Name									SAMPLECOUNT [7:0]							
Type									R/W							
Reset									0							

When HIGHSPEED=3, the sample_count is the threshold value for UART sample counter (sample_num).

UARTn+002Ch SAMPLE_POINT SAMPLE_POINT

Bit	15	14	13	12	11	10	9	8	7	6	5	4	3	2	1	0
Name									SAMPLEPOINT [7:0]							
Type									R/W							
Reset									ffh							

When HIGHSPEED=3, UART gets the input data when sample_count=sample_num.

e.g. system clock = 13MHz, 921600 = 13000000 / 14

sample_count = 14 and sample point = 7 (sample the central point to decrease the inaccuracy)

UARTn+0030h AUTOBAUD_REG

AUTOBAUD_REG

Bit	15	14	13	12	11	10	9	8	7	6	5	4	3	2	1	0
Name									BAUD_STAT[3:0]				BAUDRATE[3:0]			
Type									R				R			
Reset									0				0			

BAUD_RATE Autobaud baud rate

- **0** 115200
- **1** 57600
- **2** 38400
- **3** 19200
- **4** 9600
- **5** 4800
- **6** 2400
- **7** 1200
- **8** 300
- **9** 110

BAUDSTAT Autobaud format

- **0** Autobaud is detecting
- **1** AT_7N1
- **2** AT_7O1
- **3** AT_7E1
- **4** AT_8N1
- **5** AT_8O1
- **6** AT_8E1
- **7** at_7N1
- **8** at_7E1
- **9** at_7O1
- **10** at_8N1
- **11** at_8E1
- **12** at_8O1
- **13** Autobaud detection fails

UARTn+0038h AUTOBAUDSAMPLE

AUTOBAUDSAMPLE

Bit	15	14	13	12	11	10	9	8	7	6	5	4	3	2	1	0
Name										AUTOBAUDSAMPLE						
Type										R/W	R/W	R/W	R/W	R/W	R/W	R/W
Reset										dh						

Since the system clock may changes, autobaud sample duration should changes as system clock changes. When system clock = 13MHz, autobaudsample = 6; when system clock = 26MHz, autobaudsample = 13.

UARTn+003Ch Guard time added register GUARD

Bit	15	14	13	12	11	10	9	8	7	6	5	4	3	2	1	0
Name												GUARD_EN	GUARD_CNT[3:0]			
Type												R/W	R/W	R/W	R/W	R/W
Reset												0	0	0	0	0

GUARD_CNT Guard interval count value. Guard interval = (1/(system clock / 16 / div)) * GUARD_CNT.

GUARD_EN Guard interval add enable signal

0 No guard interval added

1 Add guard interval after stop bit

UARTn+0040h Escape character register ESCAPE_DAT

Bit	15	14	13	12	11	10	9	8	7	6	5	4	3	2	1	0
Name									ESCAPE_DAT[7:0]							
Type									R/W							
Reset									FFh							

ESCAPE_DAT Escape character added before software flow control data and escape character, i.e. if tx data is xon (31h), with esc_en =1, uart will transmit data as esc + CEh (~xon).

UARTn+0044h Escape enable register ESCAPE_EN

Bit	15	14	13	12	11	10	9	8	7	6	5	4	3	2	1	0
Name																ESC_EN
Type																R/W
Reset																0

ESC_EN Add escape character in transmitter and remove escape character in receiver by UART.

0 Don't deal with the escape character

1 Add escape character in transmitter and remove escape character in receiver

UARTn+0048h Sleep enable register SLEEP_EN

Bit	15	14	13	12	11	10	9	8	7	6	5	4	3	2	1	0
Name																SELLP_EN
Type																R/W
Reset																0

SLEEP_EN For sleep mode issue

0 Don't deal with sleep mode indicate signal

1 To activate hardware flow control or software control according to software initial setting when chip enter sleep mode. Releasing hardware flow when chip wakes up; but for software control, uart will send xon when wakes up and FIFO doesn't reach threshold level.

UARTn+004Ch Virtual FIFO enable register VFIFO_EN

Bit	15	14	13	12	11	10	9	8	7	6	5	4	3	2	1	0
Name																VFIFO_EN
Type																R/W
Reset																0

VFIFO_EN Virtual FIFO mechanism enable signal

0 Disable VFIFO mode

1 Enable VFIFO mode. When virtual mode is enabled, the flow control will base on DMA threshold, and will generate timeout interrupt for DMA.

4.8 IrDA Framer

4.8.1 General Description

IrDA framer, which is depicted as **Figure 30**, is implemented to reduce the CPU loading for IrDA transmission. IrDA framer functional block can be divided into two parts: one is the transmitting part; the other is the receiving part. In the transmitter, it will perform BOFs addition, byte stuffing, the addition of 16-bits FCS and EOF appendence. In the receiving part, it will execute BOFs removing, ESC character remove, CRC checking and EOF detection. Besides, the framer will perform 3/16 modulator and demodulator to connect to the IR transceiver. The transmitter and receiver all need DMA channel.

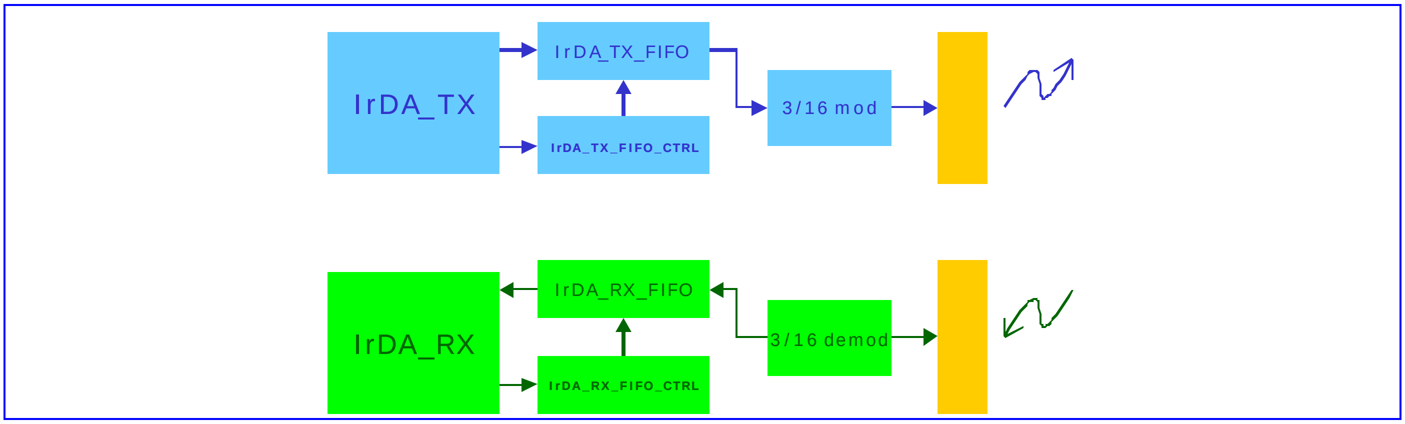

Figure 30 IrDA framer functional block

4.8.2 Register Definitions

IRDA+0000h TX BUF and RX BUF — BUF

Bit	15	14	13	12	11	10	9	8	7	6	5	4	3	2	1	0
Name									BUF[7:0]							
Type									R/W							
Reset									0							

BUF IrDA Framer transmit or receive data

IRDA+0004h TX BUF and RX BUF clear signal — BUF_CLEAR

Bit	15	14	13	12	11	10	9	8	7	6	5	4	3	2	1	0
Name																CLEAR
Type																R/W
Reset																0

CLEAR When CLEAR=1, the FIFO will be cleared

IRDA+0008h Maximum Turn Around Time MAX_T

Bit	15	14	13	12	11	10	9	8	7	6	5	4	3	2	1	0
Name			MAX_T [13:0]													
Type			R/W													
Reset			3E80h													

MAX_T Maximum turn around time is the maximum time that a station can hold the P/F bit. This parameter along with the baud rate parameter dictates the maximum number of bytes that a station can transmit before giving the line to another station by transmitting a frame with the P/F bit. This parameter is used by one station to indicate the maximum time the other station can send before it must turn the link around. 500ms is the only valid value when the baud rate is less than 115200kbps. The default value is 500ms.

IRDA+000Ch Minimum Turn Around Time MIN_T

Bit	15	14	13	12	11	10	9	8	7	6	5	4	3	2	1	0
Name	MIN_T [15:0]															
Type	R/W															
Reset	FDE8h															

MIN_T Minimum turn around time, the default value is 10ms. The minimum turn around time parameter deals with the time needed for a receiver to recover following saturation by transmission from the same device. This parameter corresponds to the required time delay between the last byte of the last frame sent by a station and the point at which it is ready to receive the first byte of a frame from another station, i.e. it is the latency for transmits complete to ready for receiving.

IRDA+0010h Number of additional BOFs prefixed to the beginning of a frame BOFS

Bit	15	14	13	12	11	10	9	8	7	6	5	4	3	2	1	0
Name									TYPE	BOFS [6:0]						
Type									R/W	R/W						
Reset									0	1011b						

BOFs Additional BOFs number; the additional BOFs parameter indicates the number of additional flags needed at the beginning of every frame. The main purpose of the addition of additional BOFs is to provide a delay at the beginning of each frame for device with long interrupt latency.

TYPE Additional BOFs type

- **1** BOF = C0h
- **0** BOF = FFh

IRDA+0014h Baud rate divisor DIV

Bit	15	14	13	12	11	10	9	8	7	6	5	4	3	2	1	0
Name	DIV[15:0]															
Type	R/W															
Reset	55h															

DIV Transmit or receive rate divider. Rate = System clock frequency / DIV/ 16; the default value = ‘h55 when in contention mode.

IRDA+0018h Transmit frame size TX_FRAME_SIZE

Bit	15	14	13	12	11	10	9	8	7	6	5	4	3	2	1	0
Name					TX_FRAME_SIZE[11:0]											
Type					R/W											
Reset					40h											

TX_FRAME_SIZE Transmit frame size; the default value = 64 when in contention mode.

IRDA+001Ch Receiving frame1 size RX_FRAME1_SIZE

Bit	15	14	13	12	11	10	9	8	7	6	5	4	3	2	1	0
Name					RX_FRAME1_SIZE[11:0]											
Type					R											
Reset					0											

RX_FRAME1_SIZE The actual number of receiving frame 1 size.

IRDA+0020h Transmit abort indication ABORT

Bit	15	14	13	12	11	10	9	8	7	6	5	4	3	2	1	0
Name																ABORT
Type																R/W
Reset																0

ABORT When set 1, the framer will transmit abort sequence and closes the frame without an FCS field or an ending flag.

IRDA+0024h IrDA framer transmit enable signal TX_EN

Bit	15	14	13	12	11	10	9	8	7	6	5	4	3	2	1	0
Name													TX_ONE	TXINVERT	MODE	TX_EN
Type													R/W	R/W	R/W	R/W
Reset													0	0	0	0

TX_EN Transmit enable

MODE Modulation type selection

- **0** 3/16 modulation
- **1** 1.61us

TXINVERT Invert transmit signal

- **0** transmit signal isn't inverted.
- **1** inverts transmit signal.

TX_ONE: Control the tranmit enable signal is one hot or not

- **0** tx_en won' t be de-asserted until software programs.
- **1** tx_en will be de-asserted (i.e. transmit disable) automatically after one frame has been send.

IRDA+0028h IrDA framer receive enable signal RX_EN

Bit	15	14	13	12	11	10	9	8	7	6	5	4	3	2	1	0
Name														RX_ONE	RXINVERT	RX_EN
Type														R/W	R/W	R/W

Reset													0	0	0

RX_EN Receive enable

RXINVERT Invert receive signal

- **0** receive signal isn't inverted
- **1** inverts receive signal

RX_ONE Disable receive when get one frame

- **0** rx_en won' t be de-asserted until software programs.
- **1** rx_en will be de-asserted (i.e. transmit disable) automatically after one frame has been send.

IRDA+002Ch FIFO trigger level indication TRIGGER

Bit	15	14	13	12	11	10	9	8	7	6	5	4	3	2	1	0
Name													RX_TRIG[		TX_TRIG	
Type													R/W		R/W	
Reset													0		0	

TX_TRIG The tx FIFO interrupt trigger threshold

00 0 byte

01 1 byte

02 2 byte

RX_TRIG The rx FIFO interrupt trigger threshold

00 1 byte

01 2 byte

02 3 byte

IRDA+0030h IRQ enable signal IRQ_ENABLE

Bit	15	14	13	12	11	10	9	8	7	6	5	4	3	2	1	0
Name				2NDRX_COMP	RXRESTART	THRESHTIMEOUT	FIFOTIMEOUT	TXABORT	RXABORT	MAXTIMEOUT	MINTIMEOUT	RXCOMPLETE	TXCOMPLETE	STATUS	RXTRIG	TXTRIG
Type					R/W	R/W	R/W	R/W	R/W	R/W	R/W	R/W	R/W	R/W	R/W	R/W
Reset					0	0	0	0	0	0	0	0	0	0	0	0

IRQ_ENABLE Interrupt enable signal

- **0** disable
- **1** enable

TXTRIG Transmit data reaches the threshold level

- **0** No interrupt is generated
- **1** Interrupt is generated when transmit FIFO size reaches threshold

RXTRIG Receive data reaches the threshold level

- **0** No interrupt is generated
- **1** Interrupt is generated when receive FIFO size reaches threshold

STATUS Any status lists as following has happened (overrun, size_error)

- **0** No interrupt is generated
- **1** Interrupt is generated when one of the statuses occurred

TXCOMPLETE Transmit one frame completely

- **0** No interrupt is generated

1 Interrupt is generated when transmitting one frame completely

RXCOMPLETE Receive one frame completely

0 No interrupt is generated

1 Interrupt is generated when receiving one frame completely

MINTIMEOUT Minimum time timeout

0 No interrupt is generated

1 Interrupt is generated when minimum timer is timed out

MAXTIMEOUT Maximum time timeout

0 No interrupt is generated

1 Interrupt is generated when maximum timer is timed out

RXABORT Receiving aborting frame

0 No interrupt is generated

1 Interrupt is generated when receiving aborting frame

TXABORT Transmitting aborting frame

0 No interrupt is generated

1 Interrupt is generated when transmitting aborting frame

FIFOTIMEOUT FIFO timeout

0 No interrupt is generated

1 Interrupt is generated when FIFO timeout

THRESHTIMEOUT Threshold time timeout

0 No interrupt is generated

1 Interrupt is generated when threshold timer is timed out

RXRESTART Receiving a new frame before one frame is received completely

0 No interrupt is generated

1 Interrupt is generated when receiving a new frame before one frame is received completely

2NDRX_COMP Receiving second frame and get P/F bit

0 No interrupt is generated

1 Interrupt is generated when receiving second frame and get P/F bit completely

IRDA+0034h Interrupt Status IRQ_STA

Bit	15	14	13	12	11	10	9	8	7	6	5	4	3	2	1	0
Name				2NDRX_COMP	RXRESTART	THRESHTIMEOUT	FIFOTIMEOUT	TXABORT	RXABORT	MAXTIMEOUT	MINTIMEOUT	RXCOMPLETE	TXCOMPLETE	STATUS	RXFIFO	TXFIFO
Type				RC	RC	RC	RC	RC	RC	RC	RC	RC	RC	RC	RC	RC
Reset				0	0	0	0	0	0	0	0	0	0	0	0	0

TXFIFO Transmit FIFO reaches threshold

RXFIFO Receive FIFO reaches threshold

ERROR generated when one of the statuses occurred

(data_error, PF_detect, fifo_hold1, fifo_empty, crc_fail, frame_error, overrun, size_error)

TXCOMPLETE Transmitting one frame completely

RXCOMPLETE Receiving one frame completely

MINTIMEOUT Minimum turn around time timeout

MAXTIMEOUT Maximum turn around time timeout

RXABORT Receiving aborting frame

TXABORT Transmitting aborting frame
FIFOTIMEOUT FIFO is timeout
THRESHTIMEOUT Threshold time timeout
RXRESTART Receiving a new frame before one frame is received completely
2NDRX_COMP Receiving second frame and get P/F bit completely

IRDA+0038h STATUS register — STATUS

Bit	15	14	13	12	11	10	9	8	7	6	5	4	3	2	1	0
Name													FIFOHOLD1	FIFO EMPTY	OVER RUN	RXSIZE
Type													R/W	R/W	R/W	R/W
Reset													0	0	0	0

RXSIZE Receive frame size error
OVERRUN Frame over run
FIFOEMPTY FIFO empty
FIFOHOLD1 FIFO holds one

IRDA+003Ch Transceiver power on/off control — TRANSCEIVER_PDN

Bit	15	14	13	12	11	10	9	8	7	6	5	4	3	2	1	0
Name																TRANS_PDN
Type																R/W
Reset																1

Transceiver_PDN Power on/off control for external IrDA transceiver

IRDA+0040h Maximum number of receiving frame size — RX_FRAME_MAX

Bit	15	14	13	12	11	10	9	8	7	6	5	4	3	2	1	0
Name					MAX_RX_FRAME_SIZE_											
Type					R/W											
Reset					0											

RX_FRAME_MAX Receive frame maxsize, when actual receiving frame size is larger than rx_frame_max, RXSIZE is asserted.

IRDA+0044h Threshold Time — THRESH_T

Bit	15	14	13	12	11	10	9	8	7	6	5	4	3	2	1	0
Name	DISCONNECT_TIME[15:0]															
Type	R/W															
Reset	bb8h															

THRESHOLD TIME Threshold time; it's used to control the time a station will wait without receiving valid frame before it disconnects the link. Associated with this is the time a station will wait without receiving valid frames before it will send a status indication to the service user layer.

IRDA+0048h Counter enable signal COUNT_ENABLE

Bit	15	14	13	12	11	10	9	8	7	6	5	4	3	2	1	0
Name														THRESH_EN	MIN_EN	MAX_EN
Type														R/W	R/W	R/W
Reset														0	0	0

COUNT_ENABLE Counter enable signals

IRDA+004Ch Indication of system clock rate CLOCK_RATE

Bit	15	14	13	12	11	10	9	8	7	6	5	4	3	2	1	0
Name															CLOCK_RATE	
Type															R/W	
Reset															0	

CLOCK_RATE Indication of the system clock rate

0 26MHz

1 52MHz

2 13MHz

IRDA+0050h System Clock Rate Fix RATE_FIX

Bit	15	14	13	12	11	10	9	8	7	6	5	4	3	2	1	0
Name																RATE_FIX
Type																R/W
Reset																0

RATE_FIX Fix irda framer sample base clock rate as 13MHz

0 clock rate base on clock_rate selection

1 13MHz

IRDA+0054h RX Frame1 Status FRAME1_STATUS

Bit	15	14	13	12	11	10	9	8	7	6	5	4	3	2	1	0
Name													UNKNOW_ERROR	PF_DETECT	CRC_FAIL	FRAME_ERROR
Type													R/W	R/W	R/W	R/W
Reset													0	0	0	0

FRAME_ERROR Framing error, i.e. stop bit = 0

0 No framing error

1 Framing error occurred

CRC_FAIL CRC check fail

0 CRC check successfully

1 CRC check fail

PF_DETECT P/F bit detect

0 No a P/F bit frame

1 Detect P/F bit in this frame

UNKNOWN_ERROR Receiving error data i.e. escape character is followed by a character that it's not a esc, bof, eof character.

0 Data receiving correctly e

1 Unknown error occurred

IRDA+0058h RX Frame2 Status FRAME2_STATUS

Bit	15	14	13	12	11	10	9	8	7	6	5	4	3	2	1	0
Name													UNKNOW_ERROR	PF_DETECT	CRC_FAIL	FRAME_ERROR
Type													R/W	R/W	R/W	R/W
Reset													0	0	0	0

FRAME_ERROR Framing error, i.e. stop bit = 0

0 No framing error

1 Framing error occurred

CRC_FAIL CRC check fail

0 CRC check successfully

1 CRC check fail

PF_DETECT P/F bit detect

0 No a P/F bit frame

1 Detect P/F bit in this frame

UNKNOWN_ERROR Receiving error data i.e. escape character is followed by a character that it's not a esc, bof, eof character.

0 Data receiving correctly

1 Unknown error occurred

IRDA+005Ch Receiving frame2 size RX_FRAME2_SIZE

Bit	15	14	13	12	11	10	9	8	7	6	5	4	3	2	1	0
Name					RX_FRAME2_SIZE[11:0]											
Type					R											
Reset					0											

RX_FRAME2_SIZE The actual number of receiving frame 2 size.

4.9 Real Time Clock

4.9.1 General Description

The Real Time Clock (RTC) module provides time and data information. It works on the 32.768KHz oscillator with independent power supply. When the MS is powered off, a dedicated regulator is used to supply the RTC block. If the main battery is not present, the backup supply such as a small mercury cell battery or a large capacitor is used. In addition to provide timing data, alarm interrupt is generated and it can be used to power up the base-band core through the BBWAKEUP pin. Also, regulator interrupts corresponding to the seconds; minutes, hours and days can be generated whenever the time counter value reaches a maximum. The year span is supported up to 2127. The maximum day of month values are stored in the RTC block, which depend on the leap year condition.

4.9.2 Register Definitions

RTC+0000h Baseband power up RTC_BBPU

Bit	15	14	13	12	11	10	9	8	7	6	5	4	3	2	1	0
Name	KEY_BBUP												AUTO	BBPU	WRITE_EN	PWREN
Type	W												R/W	R/W	R/W	R/W

KEY_BBPU Bus write acceptable only when KEY_BBPU = 0x43

AUTO If BBWAKEUP will be low state when SYSRST# high to low

- **0** BBWAKEUP won't be low state when SYSRST# high to low automatically
- **1** BBWAKEUP will be low state when SYSRST# high to low automatically

BBPU Controls the power of PMIC, when powerkey1=A357h & powerkey2=67D2h it will be the value programmed by software or it will be low if above situation is not true.

- **0** Power down
- **1** Power on

WRITE_EN When WRITE_EN is written as 0 by software program, the rtc write interface will be disabled until another system power on.

PWREN

- **0** RTC alarm has no action on power switch
- **1** When RTC alarm occurs, BBPU will be assigned as 1, then system power on by rtc alarm wakeup.

RTC+0004h RTC IRQ status RTC_IRQ_STA

Bit	15	14	13	12	11	10	9	8	7	6	5	4	3	2	1	0
Name															TCSTA	ALSTA
Type															R/C	R/C

ALSTA This register indicates IRQ occurred due to alarm condition met

- **0** IRQ occurred for alarm condition met
- **1** No IRQ occurred for alarm condition met

TCSTA This register indicates IRQ occurred due to tick condition met

- **0** IRQ occurred for tick condition met
- **1** No IRQ occurred for tick condition met

RTC+0008h RTC IRQ enable RTC_IRQ_EN

Bit	15	14	13	12	11	10	9	8	7	6	5	4	3	2	1	0
Name														ONESHOT	TC_EN	AL_EN
Type														R/W	R/W	R/W

ONESHOT Controls automatic reset of AL_EN & TC_EN

AL_EN This register indicates the control bit for IRQ generation due to alarm condition met

- **0** Disable IRQ generation due to alarm condition met
- **1** Enable the alarm time match interrupt. Clear it when ONESHOT is high upon generation of the corresponding IRQ

TC_EN This register indicates the control bit for IRQ generation due to tick condition met

- **0** Disable IRQ generation due to tick condition met

1 Enable the tick time match interrupt. Clear it when ONESHOT is high upon generation of the corresponding IRQ

RTC+000Ch Counter increment IRQ enable RTC_CII_EN

Bit	15	14	13	12	11	10	9	8	7	6	5	4	3	2	1	0
Name							1/8SECCII	1/4SECCII	1/2SECCII	YEACII	MTHCII	DOWCII	DOMCII	HOUCII	MINCII	SECCII
Type							R/W	R/W	R/W	R/W	R/W	R/W	R/W	R/W	R/W	R/W

This register activates or de-activates the IRQ generation when the TC counter reaches its maximum value.

SECCII Set this bit to 1 to activate the IRQ at each second update

MINCII Set the bit to 1 to activate the IRQ at each minute update

HOUCII Set the bit to 1 to activate the IRQ at each hour update

DOMCII Set the bit to 1 to activate the IRQ at each day of month update

DOWCII Set the bit to 1 to activate the IRQ at each day of week update

MTHCII Set the bit to 1 to activate the IRQ at each month update

YEACII Set the bit to 1 to activate the IRQ at each year update

1/2SECCII Set the bit to 1 to activate the IRQ at each one-half update

1/4SECCII Set the bit to 1 to activate the IRQ at each one-fourth update

1/8SECCII Set the bit to 1 to activate the IRQ at each one-eighth update

RTC+0010h RTC alarm mask RTC_AL_MASK

Bit	15	14	13	12	11	10	9	8	7	6	5	4	3	2	1	0
Name										YEA_MSK	MTH_MSK	DOW_MSK	DOM_MSK	HOU_MSK	MIN_MSK	SEC_MSK
Type										R/W	R/W	R/W	R/W	R/W	R/W	R/W

The alarm condition for alarm IRQ generation is according to each bit in this register is masked or not.

SEC_MSK

0 Condition (RTC_TC_SEC = RTC_AL_SEC) is checked to generate the alarm signal

1 Condition (RT C_TC_SEC = RTC_AL_SEC) is masked, i.e. the value of RTC_TC_SEC won't affect the alarm IRQ generation

MIN_MSK

0 Condition (RTC_TC_MIN = RTC_AL_MIN) is checked to generate the alarm signal

1 Condition (RTC_TC_MIN = RTC_AL_MIN) is masked, i.e. the value of RTC_TC_MIN won't affect the alarm IRQ generation

HOU_MSK

0 Condition (RTC_TC_HOU = RTC_AL_HOU) is checked to generate the alarm signal

1 Condition (RTC_TC_HOU = RTC_AL_HOU) is masked, i.e. the value of RTC_TC_HOU won't affect the alarm IRQ generation

DOM_MSK

0 Condition (RTC_TC_DOM = RTC_AL_DOM) is checked to generate the alarm signal

1 Condition (RTC_TC_DOM = RTC_AL_DOM) is masked, i.e. the value of RTC_TC_DOM won't affect the alarm IRQ generation

DOW_MSK

0 Condition (RTC_TC_DOW = RTC_AL_DOW) is checked to generate the alarm signal

1 Condition (RTC_TC_DOW = RTC_AL_DOW) is masked, i.e. the value of RTC_TC_DOW won't affect the alarm IRQ generation

MTH_MSK

0 Condition (RTC_TC_MTH = RTC_AL_MTH) is checked to generate the alarm signal

1 Condition (RTC_TC_MTH = RTC_AL_MTH) is masked, i.e. the value of RTC_TC_MTH won't affect the alarm IRQ generation

YEA_MSK

0 Condition (RTC_TC_YEA = RTC_AL_YEA) is checked to generate the alarm signal

1 Condition (RTC_TC_YEA = RTC_AL_YEA) is masked, i.e. the value of RTC_TC_YEA won't affect the alarm IRQ generation

RTC+0014h RTC seconds time counter register RTC_TC_SEC

Bit	15	14	13	12	11	10	9	8	7	6	5	4	3	2	1	0
Name											TC_SECOND					
Type											R/W					

TC_SECOND The time counter second initial value. The range of its value is: 0-59.

RTC+0018h RTC minutes time counter register RTC_TC_MIN

Bit	15	14	13	12	11	10	9	8	7	6	5	4	3	2	1	0
Name											TC_MINUTE					
Type											R/W					

TC_MINUTE The time counter minute initial value. The range of its value is: 0-59.

RTC+001Ch RTC hours time counter register RTC_TC_HOU

Bit	15	14	13	12	11	10	9	8	7	6	5	4	3	2	1	0
Name												TC_HOUR				
Type												R/W				

TC_HOUR The time counter hour initial value. The range of its value is: 0-23.

RTC+0x0020 RTC day of month time counter register RTC_TC_DOM

Bit	15	14	13	12	11	10	9	8	7	6	5	4	3	2	1	0
Name												TC_DOM				
Type												R/W				

TC_DOM The time counter day of month initial value. The day of month maximum value depends on the leap year condition, i.e. 2 LSB of year time counter are zeros.

RTC+0x0024 RTC day of week time counter register RTC_TC_DOW

Bit	15	14	13	12	11	10	9	8	7	6	5	4	3	2	1	0
Name														TC_DOW		
Type														R/W		

TC_DOW The time counter day of week initial value. The range of its value is: 1-7.

RTC+0x0028 RTC month time counter register RTC_TC_MTH

Bit	15	14	13	12	11	10	9	8	7	6	5	4	3	2	1	0
Name													TC_MONTH			

Type													R/W			

TC_MONTH The time counter month initial value. The range of its value is: 1-12.

RTC+0x002C RTC year time counter register RTC_TC_YEA

Bit	15	14	13	12	11	10	9	8	7	6	5	4	3	2	1	0
Name										AL_SECOND						
Type										R/W						

TC_YEAR The time counter year initial value. The range of its value is: 0-127. (2000-2127)

RTC+0x0030 RTC second alarm setting register RTC_AL_SEC

Bit	15	14	13	12	11	10	9	8	7	6	5	4	3	2	1	0
Name											AL_SECOND					
Type											R/W					

AL_SECOND The second value of the alarm counter setting. The range of its value is: 0-59.

RTC+0x0034 RTC minute alarm setting register RTC_AL_MIN

Bit	15	14	13	12	11	10	9	8	7	6	5	4	3	2	1	0
Name											AL_MINUTE					
Type											R/W					

AL_MINUTE The minute value of the alarm counter setting. The range of its value is: 0-59.

RTC+0x0038 RTC hour alarm setting register RTC_AL_HOU

Bit	15	14	13	12	11	10	9	8	7	6	5	4	3	2	1	0
Name												AL_HOUR				
Type												R/W				

AL_HOUR The hour value of the alarm counter setting. The range of its value is: 0-23.

RTC+0x003C RTC day of month alarm setting register RTC_AL_DOM

Bit	15	14	13	12	11	10	9	8	7	6	5	4	3	2	1	0
Name												AL_DOM				
Type												R/W				

AL_DOM The day of month value of the alarm counter setting. The day of month maximum value depends on the leap year condition, i.e. 2 LSB of year time counter are zeros.

RTC+0x0040 RTC day of week alarm setting register RTC_AL_DOW

Bit	15	14	13	12	11	10	9	8	7	6	5	4	3	2	1	0
Name														AL_DOW		
Type														R/W		

AL_DOW The day of week value of the alarm counter setting. The range of its value is: 1-7.

RTC+0x0044 RTC month alarm setting register RTC_AL_MTH

Bit	15	14	13	12	11	10	9	8	7	6	5	4	3	2	1	0
Name													AL_MONTH			
Type													R/W			

AL_MONTH The month value of the alarm counter setting. The range of its value is: 1-12.

RTC+0x0048 RTC year alarm setting register RTC_AL_YEA

Bit	15	14	13	12	11	10	9	8	7	6	5	4	3	2	1	0
Name										AL_YEAR						
Type										R/W						

AL_YEAR The year value of the alarm counter setting. The range of its value is: 0-127. (2000-2127)

RTC+0x004C XOSC bias current control register RTC_XOSCCALI

Bit	15	14	13	12	11	10	9	8	7	6	5	4	3	2	1	0
Name												XOSCCALI				
Type												W				

XOSCCALI This register controls the XOSC32 bias current. Before the first program by software, the XOSCCALI value is 11111b.

RTC+0050h RTC_POWERKEY1 register RTC_POWERKEY1

Bit	15	14	13	12	11	10	9	8	7	6	5	4	3	2	1	0
Name	RTC_POWERKEY1															
Type	R/W															

RTC+0054h RTC_POWERKEY2 register RTC_POWERKEY2

Bit	15	14	13	12	11	10	9	8	7	6	5	4	3	2	1	0
Name	RTC_POWERKEY2															
Type	R/W															

These register sets are used to determine that if the real time clock has been programmed by software; i.e. the time value in real time clock is correct. When the real time clock first power on, the register contents are all in a mass, therefore the time values shown are incorrect. Software needs to know if the real time clock has been programmed. Hence, these two registers are defined for first power-on issue. After software programs the correct value, these two register sets don't need to be updated. In addition to program the correct time value, when contents of these register sets are wrong, the interrupt won't be generated; therefore, the real time clock won't generate the interrupts before software programs it. Unwanted interrupt due to wrong time value won't occur. The destined values of these two register sets are:

RTC_POWERKEY1 A357h
RTC_POWERKEY2 67D2h

RTC+0058h PDN1 RTC_PDN1

Bit	15	14	13	12	11	10	9	8	7	6	5	4	3	2	1	0
Name									RTC_PDN1[7:0]							
Type									R/W							

RTC_PDN1[3:1] is for reset de-bounce mechanism.

- **0** 2ms
- **1** 8ms
- **2** 32ms
- **3** 128ms

4 256ms
5 512ms
6 1024ms
7 2048ms

RTC_PDN1[7:4] & RTC_PDN1[0] is the spare register for software to keep some power on and power off state information.

RTC+005Ch PDN2 RTC_PDN2

Bit	15	14	13	12	11	10	9	8	7	6	5	4	3	2	1	0
Name									RTC_PDN2[7:0]							
Type									R/W							

RTC_PDN2 The spare register for software to keep some power on and power off state information.

4.10 Auxiliary ADC Unit

The auxiliary ADC unit is used to monitor the status of battery and charger, identify the plugged peripheral, and perform temperature measurement. There provides 7 input channels for diversified application in this unit.

There provides 2 modes of operation: immediate mode and timer-triggered mode. The mode of each channel can be individually selected through register AUXADC_CON0. For example, if the flag SYN0 in the register AUXADC_CON0 is set, the channel 0 will be set in timer-triggered mode. Otherwise, it's in immediate mode.

In immediate mode, the A/D converter will sample the value once only when the flag in the register AUXADC_CON1 has been set. For example, if the flag IMM0 in the register AUXADC_CON1 is set, the A/D converter will sample the data for channel 0. The IMM flags should be cleared and set again to initialize another sampling.

The value sampled for the channel 0 will be stored in register AUXADC_DAT0, the value for the channel 1 will be stored in register AUXADC_DAT1, and vice versa.

If the AUTOSET flag in the register AUXADC_CON3 is set, the auto-sample function is enabled. The A/D converter will sample the data for the channel in which the corresponding data register has been read. For example, in case the SYN1 flag is not set, the AUTOSET flag is set, when the data register AUXADC_DAT0 has been read, the A/D converter will sample the next value for the channel 1 immediately.

If multiple channels are selected at the same time, the task will be performed sequentially on every selected channel. For example, if we set AUXADC_CON1 to be 0x7f, that is, all 7 channels are selected, the state machine in the unit will start sampling from channel 6 to channel 0, and save the values of each input channel in the respective registers. The same process also applies in the timer-triggered mode.

In timer-triggered mode, the A/D converter will sample the value for the channels in which the corresponding SYN flags are set when the TDMA timer counts to the value specified in the register TDMA_AUXEV1, which is placed in the TDMA timer. For example, if we set AUXADC_CON0 to be 0x7f, all 7 channels are selected to be in timer-triggered mode. The state machine will make sampling for all 7 channels sequentially and save the values in registers from AUXADC_DAT0 to AUXADC_DAT6, as it does in immediate mode.

There provides a dedicated timer-triggered scheme for channel 0. The scheme is enabled by setting the SYN7 flag in the register AUXADC_CON2. The timing offset for this event is stored in the register TDMA_AUXEV0 in the TDMA timer.

The sampled data triggered by this specific event is stored in the register AUXADC_DAT7. It's used to separate the results of two individual software routines that perform action on the auxiliary ADC unit.

The AUTOCLR*n* in the register AUXADC_CON3 is set when it's intended to sample only once after setting timer-triggered mode. If AUTOCLR1 flag has been set, after the data for the channels in timer-triggered mode has been stored, the SYN*n* flags in the register AUXADC_CON0 will be cleared. Instead, if AUTOCLR0 flag has been set, after the data for the channel 0 has been stored in the register AUXADC_DAT7, the SYN7 flag in the register AUXADC_CON2 will be cleared.

The usage of the immediate mode and timer-triggered mode are mutual exclusive in terms of individual channel.

The PUWAIT_EN bit in the registers AUXADC_CON3 is used to power up the analog port in advance. That ensures that the power has ramped up to the stable state before A/D converter starts the conversion. The analog part will be automatically powered down after the conversion is completed.

4.10.1 Register Definitions

AUXADC+0000h Auxiliary ADC control register 0 AUXADC_CON0

Bit	15	14	13	12	11	10	9	8	7	6	5	4	3	2	1	0
Name										SYN6	SYN5	SYN4	SYN3	SYN2	SYN1	SYN0
Type										R/W	R/W	R/W	R/W	R/W	R/W	R/W
Reset										0	0	0	0	0	0	0

SYN*n* Those 7 bits define whether the corresponding channel is to be sampled or not in timer-triggered mode. It's associated with timing offset register TDMA_AUXEV1. It's supported to set multiple flags. The flags can be automatically clearly after those channel have been sampled if AUTOCLR1 in the register AUXADC_CON3 is set.

- **0** The channel is not selected.
- **1** The channel is selected.

AUXADC+0004h Auxiliary ADC control register 1 AUXADC_CON1

Bit	15	14	13	12	11	10	9	8	7	6	5	4	3	2	1	0
Name										IMM6	IMM5	IMM4	IMM3	IMM2	IMM1	IMM0
Type										R/W	R/W	R/W	R/W	R/W	R/W	R/W
Reset										0	0	0	0	0	0	0

IMM*n* Those 7 bits are set individually to sample the data for the corresponding channel. It's supported to set multiple flags.

- **0** The channel is not selected.
- **1** The channel is selected.

AUXADC+0008h Auxiliary ADC control register 2 AUXADC_CON2

Bit	15	14	13	12	11	10	9	8	7	6	5	4	3	2	1	0
Name																SYN7
Type																R/W
Reset																0

SYN7 This bit is used only for channel 0 and to be associated with timing offset register TDMA_AUXEV0 in the TDMA timer in timer-triggered mode. The flag can be automatically clearly after channel 0 have been sampled if AUTOCLR0 in the register AUXADC_CON3 is set.

- **0** The channel is not selected.
- **1** The channel is selected.

AUXADC+000Ch Auxiliary ADC control register 3 AUXADC_CON3

Bit	15	14	13	12	11	10	9	8	7	6	5	4	3	2	1	0
Name	AUTOSET				PUWAIT_EN		AUTOCLR1	AUTOCLR0								STA
Type	R/W				R/W		R/W	R/W								RO
Reset	0				0		0	0								0

AUTOSET The field defines the auto-sample mode of the module. In auto-sample mode, each channel with its sample register being read can start sampling immediately without configuring the control register AUXADC_CON1 again.

PUWAIT_EN The field enables the power warm-up period to ensure power stability before the SAR process take place. It's recommended to activate.

- **0** The mode is not enabled.
- **1** The mode is enabled.

AUTOCLR1 The field defines the auto-clear mode of the module for event 1. In auto-clear mode, each timer-triggered channel get the samples of the specified channels once after the SYN*n* bit in the register AUXADC_CON0 have been set. The SYN*n* bits will be automatically be cleared and the channel will not being enabled again by the timer event except the SYN*n* flags are set again.

- **0** The automatic clear mode is not enabled.
- **1** The automatic clear mode is enabled.

AUTOCLR0 The field defines the auto-clear mode of the module for event 0. In auto-clear mode, the timer-triggered channel 0 get the sample once after the SYN7 bit in the register AUXADC_CON2 have been set. The SYN7 bit will be automatically cleared and the channel will not be enabled again by the timer event 0 except the SYN7 flag is set again.

- **0** The automatic clear mode is not enabled.
- **1** The automatic clear mode is enabled.

STA The field defines the state of the module.

- **0** This module is idle.
- **1** This module is operating.

AUXADC+0010h Auxiliary ADC channel 0 register AUXADC_DAT0

Bit	15	14	13	12	11	10	9	8	7	6	5	4	3	2	1	0
Name							DAT									
Type							RO									
Reset							0									

The register stores the sampled data for the channel 0. There are 8 registers of the same type for the corresponding channel. The overall register definition is listed in **Table 23**.

MediaTek Inc. Confidential

Register Address	Register Function	Acronym
AUXADC+0010h	Auxiliary ADC channel 0 data register	AUXADC_DAT0
AUXADC+0014h	Auxiliary ADC channel 1 data register	AUXADC_DAT1
AUXADC+0018h	Auxiliary ADC channel 2 data register	AUXADC_DAT2
AUXADC+001Ch	Auxiliary ADC channel 3 data register	AUXADC_DAT3
AUXADC+0020h	Auxiliary ADC channel 4 data register	AUXADC_DAT4
AUXADC+0024h	Auxiliary ADC channel 5 data register	AUXADC_DAT5
AUXADC+0028h	Auxiliary ADC channel 6 data register	AUXADC_DAT6
AUXADC+002Ch	Auxiliary ADC channel 0 data register for TDMA event 0	AUXADC_DAT7

Table 23 Auxiliary ADC data register list

5 Microcontroller Coprocessors

Microcontroller Coprocessors are designed to run computing-intensive processes in place of Microcontroller (MCU). Those coprocessors intend to offer a solution special for timing critical GSM/GPRS Modem processes that require fast response and massive data movement. Controls to the coprocessors are all through memory access by way of APB Bus.

5.1 GPRS Cipher Unit

5.1.1 General Description

The unit implements the GPRS encryption/decryption scheme that accelerates the computation of encryption and decryption GPRS pattern. The block accelerates the computation of the key stream. However the bit-wise encryption/decryption of the data is still done by the MCU.

Both GEA and GEA2 are supported.

Register Address	Register Function	Acronym
GCU+0000h	GPRS Encryption Algorithm Control Register	GCU_CON
GCU+0004h	GPRS Encryption Algorithm Status Register	GCU_SAT
GCU+0008h	GPRS Secret Key Kc 0 Register	GCU_SKEY0
GCU+000Ch	GPRS Secret Key Kc 1 Register	GCU_SKEY1
GCU+0010h	GPRS Message Key Register	GCU_MKEY
GCU+0014h	GPRS Ciphered Data Register	GCU_CDATA

Table 24 GCU Registers

5.1.2 Register Definitions

GCU+0000h GPRS Encryption Algorithm Control Register GCU_CON

Bit	31	30	29	28	27	26	25	24	23	22	21	20	19	18	17	16
Name																
Type																
Reset																
Bit	15	14	13	12	11	10	9	8	7	6	5	4	3	2	1	0
Name											RBO	KS		SINIT	DIR	GEA2
Type											R/W	R/W		WO	R/W	R/W
Reset											1	10		0	0	0

This register controls the key generation function of the GPRS Encryption Algorithm.

GEA2 Choose the encryption/decryption scheme. 1 = GEA2, while 0 = GEA.

DIR The DIRECTION input of the GPRS Encryption Algorithm.

SINIT Start initialization. The MCU writes 1 to start initialization. The bit is always read at 0.

KS Control the read access. 00 = byte access, 01 = half word (16 bits) access, 10 = word access, 11 reserved. Default value is 10.

RBO Reversal Byte Order bit. If the bit was set to 1, the byte order of GCU_SKEY0, GCU_SKEY1, GCU_MKEY in write operation and GCU_SKEY0, GCU_SKEY1, GCU_MKEY, GCU_CDATA in read operation would be the reverse of baseband processor, and if the bit was 0, the behavior would be the same as baseband processor. Byte-order of GCU_CON and GCU_SAT is not affected.

GCU+0004h GPRS Encryption Algorithm Status Register GCU_SAT

Bit	31	30	29	28	27	26	25	24	23	22	21	20	19	18	17	16
Name																
Type																
Reset																
Bit	**15**	**14**	**13**	**12**	**11**	**10**	**9**	**8**	**7**	**6**	**5**	**4**	**3**	**2**	**1**	**0**
Name	**STAT**													**KEY_COM**	**INIT**	
Type	RO													RO	RO	
Reset	110													0	0	

This register shows the status of the GPRS Encryption unit.

INIT Initialization flag. 1= the GCU is currently performing the initialization phase.

KEY_COM Key-stream computation. 1 = the GCU is computing new key stream, while 0 = a new key is available or the GCU is in initialization phase.

STAT The state of GCU core. For debug purpose.

GCU+0008h GPRS Secret Key Kc 0 Register GCU_SKEY0

Bit	31	30	29	28	27	26	25	24	23	22	21	20	19	18	17	16
Name	**KC[31:16]**															
Type	R/W															
Reset	0															
Bit	**15**	**14**	**13**	**12**	**11**	**10**	**9**	**8**	**7**	**6**	**5**	**4**	**3**	**2**	**1**	**0**
Name	**KC[15:0]**															
Type	R/W															
Reset	0															

GCU+000Ch GPRS Secret Key Kc 1 Register GCU_SKEY1

Bit	31	30	29	28	27	26	25	24	23	22	21	20	19	18	17	16
Name	**KC[63:48]**															
Type	R/W															
Reset	0															
Bit	**15**	**14**	**13**	**12**	**11**	**10**	**9**	**8**	**7**	**6**	**5**	**4**	**3**	**2**	**1**	**0**
Name	**KC[47:32]**															
Type	R/W															
Reset	0															

This set of registers shall be programmed with the GPRS Encryption Algorithm secret key.

GCU+0010h GPRS Message Key Register GCU_MKEY

Bit	31	30	29	28	27	26	25	24	23	22	21	20	19	18	17	16
Name	**MKEY[31:16]**															
Type	R/W															
Reset	0															
Bit	**15**	**14**	**13**	**12**	**11**	**10**	**9**	**8**	**7**	**6**	**5**	**4**	**3**	**2**	**1**	**0**
Name	**MKEY[15:0]**															

Type	R/W
Reset	0

This register shall be programmed with the "message key" for the GPRS Encryption Algorithm.

GCU+0014h GPRS Ciphered DATA Register GCU_CDATA

Bit	31	30	29	28	27	26	25	24	23	22	21	20	19	18	17	16
Name	CDATA[31:16]															
Type	RO															
Bit	15	14	13	12	11	10	9	8	7	6	5	4	3	2	1	0
Name	CDATA[15:0]															
Type	RO															

The register contains the key stream. GCU will continue to generate next word of key while current word of key is removed.

5.2 Divider

To ease the processing load of MCU, a divider is employed here. The divider can operate signed and unsigned 32bit/32bit division, as well as modulus, and the processing time of the divider is from 1 clock cycle to 33 clock cycles, which is upon the magnitude of the value of the dividend. The detailed processing time is listed below in **Table 7**. From the table we can see that there are two kind of processing time, except the dividend is zero, in an item. That depends on the need of restoring at the last step of a division operation.

After the divider is started by setting START to "1" in Divider Control Register, DIV_RDY will go low, and it will be asserted after the division process is finished. MCU could detect this status bit by polling it to know the right access timing. In order to simplify the polling, only the value of register DIV_RDY will appear while Divider Control Register is read. Hence MCU doesn' t need to mask other bits to extract the value of DIV_RDY.

In GSM/GPRS system, many divisions are executed with some constant divisors. Therefore, some often-used constants are stored in the divider to speed up the process. By controlling control bits IS_CNST and CNST_IDX in Divider Control register, one can start a division without giving a divisor. This could save the time for writing divisor in and the instruction fetch time thereof, and makes process more efficient.

Signed Division		Unsigned Division	
Dividend	**Clock Cycles**	**Dividend**	**Clock Cycles**
0000_0000h	1	0000_0000h	1
0000_00ffh – (-0000_0100h), excluding 0x0000_0000	8 or 9	0000_0001h - 0000_00ffh	8 or 9
0000_ffffh – (-0001_0000h)	16 or 17	0000_0100h - 0000_ffffh	16 or 17
00ff_ffffh – (-0100_0000h)	24 or 25	0001_0000h - 00ff_ffffh	24 or 25
7fff_ffffh – (-8000_0000h)	32 or 33	0100_0000h - ffff_ffffh	32 or 33

Table 25 Processing time in different value of dividend.

5.2.1 Register Definitions

DIVIDER+0000h Divider Control Register DIV_CON

Bit	31	30	29	28	27	26	25	24	23	22	21	20	19	18	17	16
Name									CNST_IDX							
Type	R/W	R/W	R/W	R/W	R/W	R/W	R/W	R/W	R/W							
Reset	0	0	0	0	0	0	0	0	0							
Bit	15	14	13	12	11	10	9	8	7	6	5	4	3	2	1	0
Name											IN_CNST	SIGN			DIV_RDY	START
Type	R/W	R/W	R/W	R/W	R/W	R/W	R/W	R/W	R/W	R/W	WO	WO	R/W	R/W	RO	WO
Reset	0	0	0	0	0	0	0	0	0	0	0	1	0	0	1	0

START To start division. It will return to 0 after division is started.

DIV_RDY Current status of divider. Note that when DIV_CTRL register is read, only the value of DIV_RDY will appear. That means program doesn' t need to mask other part of the register to extract the information of DIV_RDY.

- **0** division is in progress.
- **1** division is finished.

SIGN To indicate signed or unsigned division.

- **0** Unsigned division.
- **1** Signed division.

IS_CNST To indicate if use internal constant value as a divisor. If IS_CNST is enabled, User needn' t to write value of divisor, and divider will automatically use internal constant value instead. What value divider will use is according to the value of CNST_IDX.

- **0** Normal division. Divisor is written in via APB
- **1** Using internal constant divisor instead.

CNST_IDX Index of constant divisor.

- **0** divisor = 13
- **1** divisor = 26
- **2** divisor = 51
- **3** divisor = 52
- **4** divisor = 102
- **5** divisor = 104

DIVIDER +0004h Divider Dividend register DIV_DIVIDEND

Bit	31	30	29	28	27	26	25	24	23	22	21	20	19	18	17	16
Name	DIVIDEND[31:16]															
Type	WO															
Reset	0															
Bit	15	14	13	12	11	10	9	8	7	6	5	4	3	2	1	0
Name	DIVIDEND[15:0]															
Type	WO															
Reset	0															

Dividend.

DIVIDER +0008h **Divider Divisor register** **DIV_DIVISOR**

Bit	31	30	29	28	27	26	25	24	23	22	21	20	19	18	17	16
Name	DIVISOR[31:16]															
Type	WO															
Reset	0															
Bit	15	14	13	12	11	10	9	8	7	6	5	4	3	2	1	0
Name	DIVISOR[15:0]															
Type	WO															
Reset	0															

Divisor.

DIVIDER +000Ch **Divider Quotient register** **DIV_QUOTIENT**

Bit	31	30	29	28	27	26	25	24	23	22	21	20	19	18	17	16
Name	QUOTIENT[31:16]															
Type	RO															
Reset	0															
Bit	15	14	13	12	11	10	9	8	7	6	5	4	3	2	1	0
Name	QUOTIENT[15:0]															
Type	RO															
Reset	0															

Quotient.

DIVIDER +0010h **Divider Remainder register** **DIV_REMAINDER**

Bit	31	30	29	28	27	26	25	24	23	22	21	20	19	18	17	16
Name	REMAINDER[31:16]															
Type	RO															
Reset	0															
Bit	15	14	13	12	11	10	9	8	7	6	5	4	3	2	1	0
Name	REMAINDER[15:0]															
Type	RO															
Reset	0															

Remainder.

5.3 CSD Accelerator

5.3.1 General Description

This unit performs the data format conversion of RA0 RA1 and FAX in CSD service. CSD service comprises two major functions, data flow throttling and data format conversion. The data format conversion is a bit-wise operation and takes a number of instructions to complete a conversion. Therefore it's not efficient to do by MCU self. A coprocessor, CSD accelerator, is designed here to reduce the computing power need by performing this function.

What CSD accelerator do is just help to convert data format, and the function of data flow throttling is still implemented by MCU. Basically, CSD accelerator performs three types of data format conversion, RA0, RA1 and FAX.

For RA0 conversion, only uplink RA0 data format conversion is provided here. That's because there are too many judgments on downlink path conversion, and this will greatly increase area cost. Uplink RA0 conversion is to insert one start bit and one stop bit before and after a byte respectively during 16 bytes. **Figure 31** illustrates the detailed conversion table.

RA0 converter can only process RA0 data state by state. Before filling in new data, software must make sure the converted data of certain state is withdrawn, or the converted data will be replaced by the new data. For example, if 32-bit data in written, and then state pointer goes from state 0 to state 1, and word ready of state 0 is asserted. Before writing next 32-bit data, the word of state 0 should be withdrawn first, or the data will lose.

RA0 records the number of written bytes, state pointer, and ready state word. The information can help software to do flow control. See Register Definition for the detail.

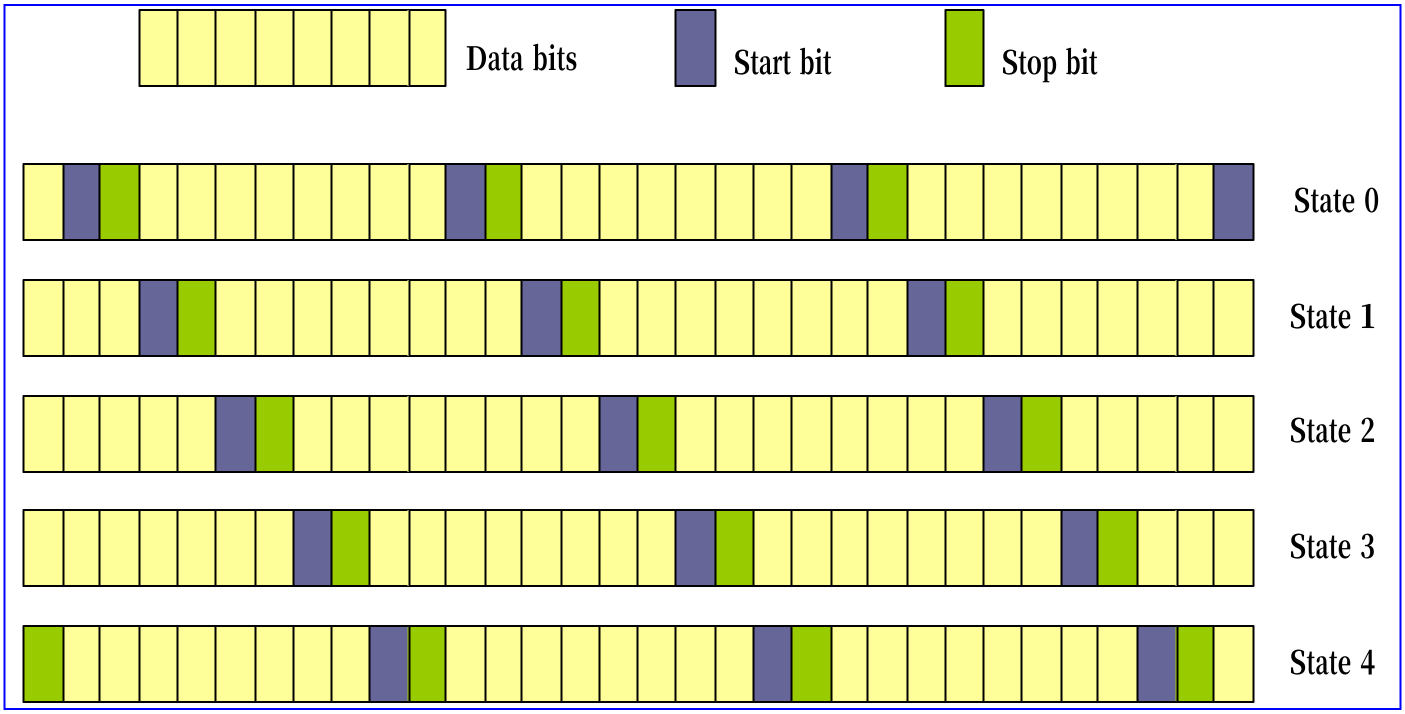

Figure 31 data format conversion of RA0

For RA1 conversion, both directions, downlink and uplink, are supported. The data formats vary in different data rate. The detailed conversion table is shown in **Figure 32** and **Figure 33**. The yellow part is the payload data, and the blue part is status bit.

Bit 0 → Bit 6

D1	D2	D3	D4	D5	D6	S1
D7	D8	D9	D10	D11	D12	X
D13	D14	D15	D16	D17	D18	S3
D19	D20	D21	D22	D23	D24	S4
E4	E5	E6	E7	D25	D26	D27
D28	D29	D30	S6	D31	D32	D33
D34	D35	D36	X	D37	D38	D39
D40	D41	D42	S8	D43	D44	D45
D46	D47	D48	S9			

Bit 59

Figure 32 data format conversion for 6k/12k RA1

Bit 0 → Bit 7

D1	D2	D3	S1	D4	D5	D6	X
D7	D8	D9	S3	D10	D11	D12	S4
E4	E5	E6	E7	D13	D14	D15	S6
D16	D17	D18	X	D19	D20	D21	S8
D22	D23	D24	S9				

Bit 36

Figure 33 data format conversion for 3.6k RA1

For FAX, two types of bit-reversal functions are provided. One is bit-wise reversal, and the other is byte-wise reversal, which are illustrated in **Figure 34** and **Figure 35** respectively.

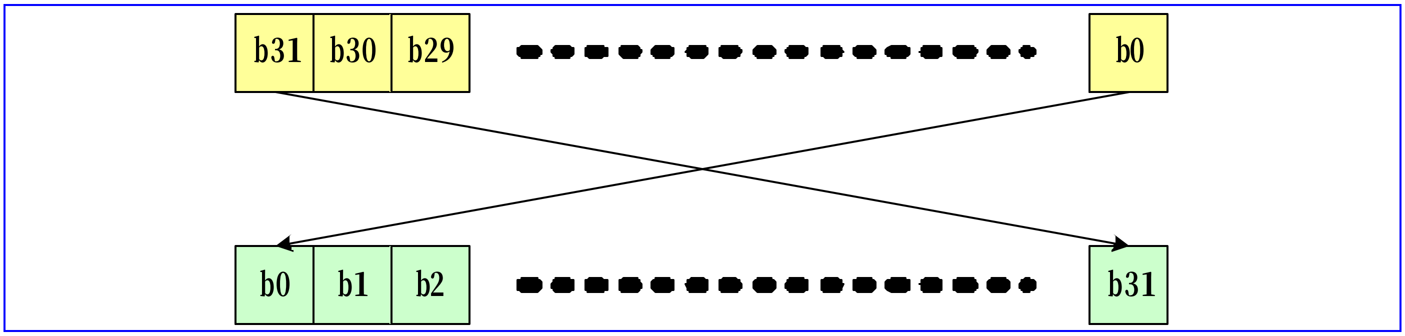

Figure 34 Type 1 bit reverse

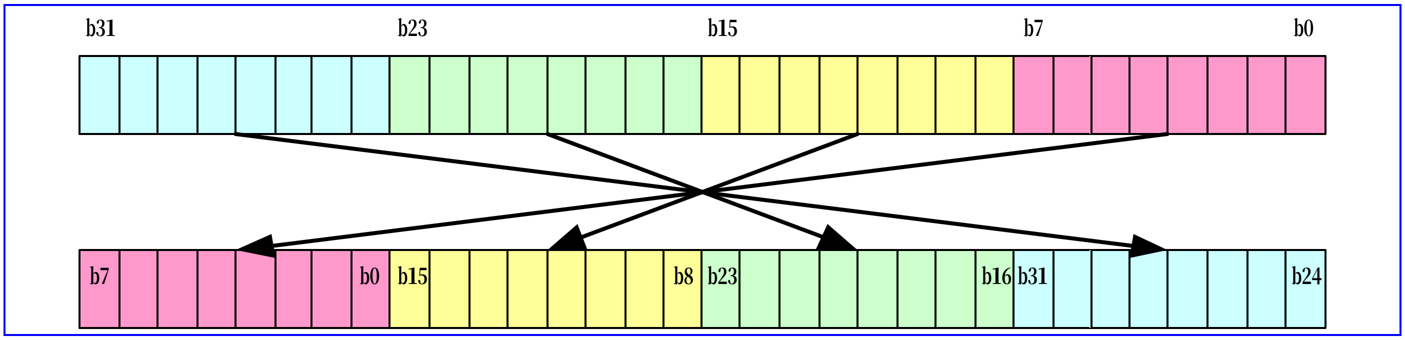

Figure 35 Type 2 bit reverse

Register Address	Register Function	Acronym
CSD + 0000h	CSD RA0 Control Register	**CSD_RA0_CON**
CSD + 0004h	CSD RA0 Status Register	**CSD_RA0_STA**
CSD + 0008h	CSD RA0 Input Data Register	**CSD_RA0_DI**
CSD + 000Ch	CSD RA0 Output Data Register	**CSD_RA0_DO**
CSD + 0100h	CSD RA1 6K/12K Uplink Input Data Register 0	**CSD_RA1_6_12K_ULDI0**
CSD + 0104h	CSD RA1 6K/12K Uplink Input Data Register 1	**CSD_RA1_6_12K_ULDI1**
CSD + 0108h	CSD RA1 6K/12K Uplink Status Data Register	**CSD_RA1_6_12K_ULSTUS**
CSD + 010Ch	CSD RA1 6K/12K Uplink Output Data Register 0	**CSD_RA1_6_12K_ULDO0**
CSD + 0110h	CSD RA1 6K/12K Uplink Output Data Register 1	**CSD_RA1_6_12K_ULDO1**
CSD + 0200h	CSD RA1 6K/12K Downlink Input Data Register 0	**CSD_RA1_6_12K_DLDI0**
CSD + 0204h	CSD RA1 6K/12K Downlink Input Data Register 1	**CSD_RA1_6_12K_DLDI1**
CSD + 0208h	CSD RA1 6K/12K Downlink Output Data Register 0	**CSD_RA1_6_12K_DLDO0**
CSD + 020Ch	CSD RA1 6K/12K Downlink Output Data Register 1	**CSD_RA1_6_12K_DLDO1**
CSD + 0210h	CSD RA1 6K/12K Downlink Status Data Register	**CSD_RA1_6_12K_DLSTUS**
CSD + 0300h	CSD RA13.6K Uplink Input Data Register 0	**CSD_RA1_3P6K_ULDI0**
CSD + 0304h	CSD RA13.6K Uplink Status Data Register	**CSD_RA1_3P6K_ULSTUS**
CSD + 0308h	CSD RA13.6K Uplink Output Data Register 0	**CSD_RA1_3P6K_ ULDO0**
CSD + 030Ch	CSD RA13.6K Uplink Output Data Register 1	**CSD_RA1_3P6K_ULDO1**
CSD + 0400h	CSD RA1 3.6K Downlink Input Data Register 0	**CSD_RA1_3P6K_DLDI0**
CSD + 0404h	CSD RA1 3.6K Downlink Input Data Register 1	**CSD_RA1_3P6K_DLDI1**

CSD + 0408h	CSD RA1 3.6K Downlink Output Data Register 0	**CSD_RA1_3P6K_DLDO0**
CSD + 040Ch	CSD RA1 3.6K Downlink Status Data Register	**CSD_RA1_3P6K_DLSTUS**
CSD + 0500h	CSD FAX Bit Reverse Type 1 Input Data Register	**CSD_FAX_BR1_DI**
CSD + 0504h	CSD FAX Bit Reverse Type 1 Output Data Register	**CSD_FAX_BR1_DO**
CSD + 0510h	CSD FAX Bit Reverse Type 2 Input Data Register	**CSD_FAX_BR2_DI**
CSD + 0514h	CSD FAX Bit Reverse Type 2 Output Data Register	**CSD_FAX_BR2_DO**

Table 26 CSD Accelerater Registers

5.3.2 Register Definitions

CSD+0000h CSD RA0 Control Register CSD_RA0_CON

Bit	31	30	29	28	27	26	25	24	23	22	21	20	19	18	17	16
Name																
Type																
Reset																
Bit	**15**	**14**	**13**	**12**	**11**	**10**	**9**	**8**	**7**	**6**	**5**	**4**	**3**	**2**	**1**	**0**
Name											RST	BTS0		VLD_BYTE		
Type											WO	WO		R/W		
Reset											0	0		100		

VLD_BYTE Specify how many valid bytes of current input data. It must be specified before filling data in.

BTS0 Back to state 0. Force RA0 converter go back to state 0. Incomplete word will be padded by STOP bit. For instance, back-to-state0 command is issued after 8 byte data are filled in. Then these bit after the 8th byte will be padded with stop bits, and RDYWD2 is asserted. After removing state word 2, the state pointer goes back to state 0. Note that new data filling should take place after removing state word 2, or the state pointer may be out of order.

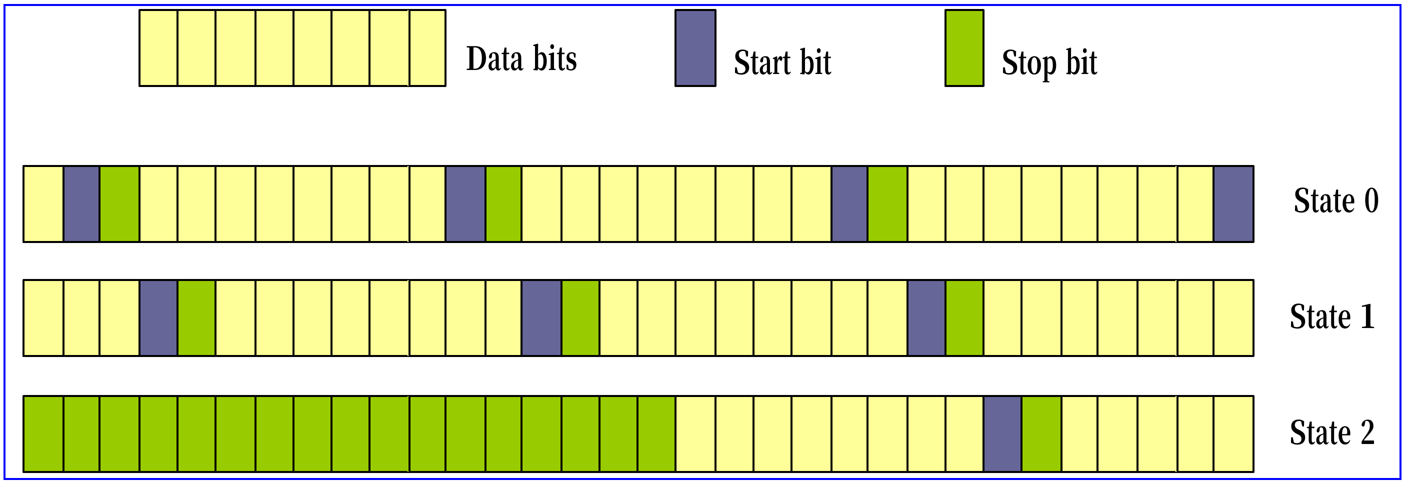

Figure 36 Example of Back to state 0

RST Reset RA0 converter. In case, erroneously operation makes data disordered. This bit can restore all state to original state.

CSD+0004h CSD RA0 Status Register CSD_RA0_STA

Bit	31	30	29	28	27	26	25	24	23	22	21	20	19	18	17	16
Name																
Type																
Reset																
Bit	**15**	**14**	**13**	**12**	**11**	**10**	**9**	**8**	**7**	**6**	**5**	**4**	**3**	**2**	**1**	**0**
Name					BYTECNT				CRTSTA			RDYWD				
Type					R/W				R/W			RC				
Reset					0				0			0				

RDYWD0~4 Ready word. To indicate which state word is ready for withdrawal. Data should be withdrawn before next data filling into CSD_RA0_DI, if there are any bits asserted.

- **0** Not ready
- **1** Ready

CRTSTA current state. State0 ~ state4. To indicate which state word software is filling in.

BYTECNT The total number of bytes software filling in.

CSD+0008h CSD RA0 Input Data Register CSD_RA0_DI

Bit	31	30	29	28	27	26	25	24	23	22	21	20	19	18	17	16
Name	DIN															
Type	R/W															
Reset	0															
Bit	**15**	**14**	**13**	**12**	**11**	**10**	**9**	**8**	**7**	**6**	**5**	**4**	**3**	**2**	**1**	**0**
Name	DIN															
Type	R/W															
Reset	0															

DIN The RA0 convert input data. Ready word indicator shall be check before filling in data. If there are any words ready, withdraw them first, or the ready data in RA0 converter will be replaced.

CSD+000Ch CSD RA0 Output Data Register CSD_RA0_DO

Bit	31	30	29	28	27	26	25	24	23	22	21	20	19	18	17	16
Name	DOUT															
Type	R/W															
Reset	0															
Bit	**15**	**14**	**13**	**12**	**11**	**10**	**9**	**8**	**7**	**6**	**5**	**4**	**3**	**2**	**1**	**0**
Name	DOUT															
Type	R/W															
Reset	0															

DOUT RA0 converted data. The return data is corresponding to the ready word indicator defined in CSD_RA0_STA register. The five bit of RDYWD map to state0 ~ state 4 accordingly. When CSD_RA0_DO is read, the asserted state word will be returned. If there are two state words asserted at the same time, the lower one will be returned.

CSD+0100h CSD RA1 6K/12K Uplink Input Data Register 0 CSD_RA1_6_12 K_ULDI0

Bit	31	30	29	28	27	26	25	24	23	22	21	20	19	18	17	16
Name	DIN															
Type	R/W															
Reset	0															
Bit	**15**	**14**	**13**	**12**	**11**	**10**	**9**	**8**	**7**	**6**	**5**	**4**	**3**	**2**	**1**	**0**

Name	DIN
Type	R/W
Reset	0

DIN The D1 to D32 of RA1 uplink data.

CSD+0104h CSD RA1 6K/12K Uplink Input Data Register 1 CSD_RA1_6_12K_ULDI1

Bit	31	30	29	28	27	26	25	24	23	22	21	20	19	18	17	16
Name																
Type																
Reset																
Bit	15	14	13	12	11	10	9	8	7	6	5	4	3	2	1	0
Name	DIN															
Type	R/W															
Reset	0															

DIN The D33 to D48 of RA1 uplink data.

CSD+0108h CSD RA1 6K/12K Uplink Status Data Register CSD_RA1_6_12K_ULSTUS

Bit	31	30	29	28	27	26	25	24	23	22	21	20	19	18	17	16
Name																
Type																
Reset																
Bit	15	14	13	12	11	10	9	8	7	6	5	4	3	2	1	0
Name										E7	E6	E5	E4	X	SB	SA
Type										R/W	R/W	R/W	R/W	R/W	R/W	R/W
Reset										0	0	0	0	0	0	0

SA Represents S1, S3, S6, and S8 of status bits.
SB Represents S4 and S9 of status bits.
X Represents X of status bits.
E4 Represents E4 of status bits.
E5 Represents E5 of status bits.
E6 Represents E6 of status bits.
E7 Represents E7 of status bits.

CSD+010Ch CSD RA1 6K/12K Uplink Output Data Register 0 CSD_RA1_6_12K_ULDO0

Bit	31	30	29	28	27	26	25	24	23	22	21	20	19	18	17	16
Name	DOUT															
Type	R/W															
Reset	0															
Bit	15	14	13	12	11	10	9	8	7	6	5	4	3	2	1	0
Name	DOU															
Type	R/W															
Reset	0															

DOUT The bit 0 to bit 31 of RA1 6K/12K uplink frame.

CSD+0110h CSD RA1 6K/12K Uplink Output Data Register 1 CSD_RA1_6_12K_ULDO1

Bit	31	30	29	28	27	26	25	24	23	22	21	20	19	18	17	16
Name					DOUT											
Type					R/W											
Reset					0											
Bit	15	14	13	12	11	10	9	8	7	6	5	4	3	2	1	0
Name	DOUT															
Type	R/W															
Reset	0															

DOUT The bit32 to bit 59 of RA1 6K/12K uplink frame.

CSD+0200h CSD RA1 6K/12K Downlink Input Data Register 0 CSD_RA1_6_12K_DLDI0

Bit	31	30	29	28	27	26	25	24	23	22	21	20	19	18	17	16
Name	DIN															
Type	R/W															
Reset	0															
Bit	15	14	13	12	11	10	9	8	7	6	5	4	3	2	1	0
Name	DIN															
Type	R/W															
Reset	0															

DIN The bit 0 to bit 31 of RA1 6K/12K downlink frame.

CSD+0204h CSD RA1 6K/12K Downlink Input Data Register 1 CSD_RA1_6_12K_DLDI1

Bit	31	30	29	28	27	26	25	24	23	22	21	20	19	18	17	16
Name					DIN											
Type					R/W											
Reset					0											
Bit	15	14	13	12	11	10	9	8	7	6	5	4	3	2	1	0
Name	DIN															
Type	R/W															
Reset	0															

DIN The bit32 to bit 59 of RA1 6K/12K downlink frame.

CSD+0208h CSD RA1 6K/12K Downlink Output Data Register 0 CSD_RA1_6_12K_DLDO0

Bit	31	30	29	28	27	26	25	24	23	22	21	20	19	18	17	16
Name	DOUT															
Type	R/W															
Reset	0															
Bit	15	14	13	12	11	10	9	8	7	6	5	4	3	2	1	0
Name	DOUT															
Type	R/W															
Reset	0															

DOUT The D1 to D32 of RA1 downlink data.

CSD+020Ch CSD RA1 6K/12K Downlink Output Data Register 1 CSD_RA1_6_12K_DLDO1

Bit	31	30	29	28	27	26	25	24	23	22	21	20	19	18	17	16
Name																
Type																
Reset																
Bit	15	14	13	12	11	10	9	8	7	6	5	4	3	2	1	0
Name	DOUT															
Type	R/W															
Reset	0															

DOUT The D33 to D48 of RA1 downlink data.

CSD+0210h CSD RA1 6K/12K Downlink Status Data Register CSD_RA1_6_12K_DLSTUS

Bit	31	30	29	28	27	26	25	24	23	22	21	20	19	18	17	16
Name																
Type																
Reset																
Bit	15	14	13	12	11	10	9	8	7	6	5	4	3	2	1	0
Name										E7	E6	E5	E4	X	SB	SA
Type										R/W	R/W	R/W	R/W	R/W	R/W	R/W
Reset										0	0	0	0	0	0	0

SA The result of majority votes of S1, S3, S6 and S8. SA is “0” if equal vote.

SB The result of majority votes of S4 and S9. SB is “0” if equal vote.

X The result of majority votes of two X bits in downlink frame. X is “0” if equal vote.

E4 Represents E4 of status bits.

E5 Represents E5 of status bits.

E6 Represents E6 of status bits.

E7 Represents E7 of status bits.

CSD+0300h CSD RA1 3.6K Uplink Input Data Register 0 CSD_RA1_3P6K_ULDI0

Bit	31	30	29	28	27	26	25	24	23	22	21	20	19	18	17	16
Name									DIN							
Type									R/W							
Reset									0							
Bit	15	14	13	12	11	10	9	8	7	6	5	4	3	2	1	0
Name	DIN															
Type	R/W															
Reset	0															

DIN The D1 to D24 of RA1 3.6K uplink data.

CSD+0304h CSD RA1 3.6K Uplink Status Data Register CSD_RA1_3P6K_ULSTUS

Bit	31	30	29	28	27	26	25	24	23	22	21	20	19	18	17	16
Name																
Type																

Reset																
Bit	15	14	13	12	11	10	9	8	7	6	5	4	3	2	1	0
Name										E7	E6	E5	E4	X	SB	SA
Type										R/W	R/W	R/W	R/W	R/W	R/W	R/W
Reset										0	0	0	0	0	0	0

SA Represents S1, S3, S6, and S8 of status bits.

SB Represents S4 and S9 of status bits.

X Represents X of status bits.

E4 Represents E4 of status bits.

E5 Represents E5 of status bits.

E6 Represents E6 of status bits.

E7 Represents E7 of status bits.

CSD+0308h CSD RA1 3.6K Uplink Output Data Register 0 CSD_RA1_3P6K_ULDO0

Bit	31	30	29	28	27	26	25	24	23	22	21	20	19	18	17	16
Name	DOUT															
Type	R/W															
Reset	0															
Bit	15	14	13	12	11	10	9	8	7	6	5	4	3	2	1	0
Name	DOUT															
Type	R/W															
Reset	0															

DOUT The bit 0 to bit 31 of RA1 3.6K uplink frame

CSD+030Ch CSD RA1 3.6K Uplink Output Data Register 1 CSD_RA1_3P6K_ULDO1

Bit	31	30	29	28	27	26	25	24	23	22	21	20	19	18	17	16
Name																
Type																
Reset																
Bit	15	14	13	12	11	10	9	8	7	6	5	4	3	2	1	0
Name													DOUT			
Type													R/W			
Reset													0			

DOUT The bit 32 to bit 35 of RA1 3.6K uplink frame

CSD+0400h CSD RA1 3.6K Downlink Input Data Register 0 CSD_RA1_3P6K_DLDI0

Bit	31	30	29	28	27	26	25	24	23	22	21	20	19	18	17	16
Name	DIN															
Type	R/W															
Reset	0															
Bit	15	14	13	12	11	10	9	8	7	6	5	4	3	2	1	0
Name	DIN															
Type	R/W															
Reset	0															

DIN The bit 0 to bit 31 of RA1 3.6K downlink frame

MediaTek Inc. Confidential

CSD+0404h CSD RA1 3.6K Downlink Input Data Register 1 CSD_RA1_3P6K_DLDI1

Bit	31	30	29	28	27	26	25	24	23	22	21	20	19	18	17	16
Name																
Type																
Reset																
Bit	**15**	**14**	**13**	**12**	**11**	**10**	**9**	**8**	**7**	**6**	**5**	**4**	**3**	**2**	**1**	**0**
Name													DIN			
Type													R/W			
Reset													0			

DIN The bit 32 to bit 35 of RA1 3.6K downlink frame

CSD+0408h CSD RA1 3.6K Downlink Output Data Register 0 CSD_RA1_3P6K_DLDO0

Bit	31	30	29	28	27	26	25	24	23	22	21	20	19	18	17	16
Name									DOUT							
Type									R/W							
Reset									0							
Bit	**15**	**14**	**13**	**12**	**11**	**10**	**9**	**8**	**7**	**6**	**5**	**4**	**3**	**2**	**1**	**0**
Name	DOUT															
Type	R/W															
Reset	0															

DIN The D1 to D24 of RA1 3.6K downlink data.

CSD+040Ch CSD RA1 3.6K Downlink Status Data Register CSD_RA1_3P6K_DLSTUS

Bit	31	30	29	28	27	26	25	24	23	22	21	20	19	18	17	16
Name																
Type																
Reset																
Bit	**15**	**14**	**13**	**12**	**11**	**10**	**9**	**8**	**7**	**6**	**5**	**4**	**3**	**2**	**1**	**0**
Name										E7	E6	E5	E4	X	SB	SA
Type										R/W	R/W	R/W	R/W	R/W	R/W	R/W
Reset										0	0	0	0	0	0	0

SA The result of majority votes of S1, S3, S6 and S8. SA is "0" if equal vote.

SB The result of majority votes of S4 and S9. SB is "0" if equal vote.

X The result of majority votes of two X bits in downlink frame. X is "0" if equal vote.

E4 Represents E4 of status bits.

E5 Represents E5 of status bits.

E6 Represents E6 of status bits.

E7 Represents E7 of status bits.

CSD+0500h CSD FAX Bit Reverse Type 1 Input Data Register CSD_FAX_BR1_DI

Bit	31	30	29	28	27	26	25	24	23	22	21	20	19	18	17	16
Name	DIN															
Type	R/W															

Reset	0															
Bit	15	14	13	12	11	10	9	8	7	6	5	4	3	2	1	0
Name	DIN															
Type	R/W															
Reset	0															

DIN 32-bit input data for type 1 bit reverse of FAX data. The action of Type 1 bit reverse is to reverse this word by word.

CSD+0504h CSD FAX Bit Reverse Type 1 Output Data Register CSD_FAX_BR1_DO

Bit	31	30	29	28	27	26	25	24	23	22	21	20	19	18	17	16
Name	DOUT															
Type	R/W															
Reset	0															
Bit	15	14	13	12	11	10	9	8	7	6	5	4	3	2	1	0
Name	DOUT															
Type	R/W															
Reset	0															

DOUT 32-bit result data for type 1 bit reverse of FAX data.

CSD+0510h CSD FAX Bit Reverse Type 2 Input Data Register CSD_FAX_BR2_DI

Bit	31	30	29	28	27	26	25	24	23	22	21	20	19	18	17	16
Name	DIN															
Type	R/W															
Reset	0															
Bit	15	14	13	12	11	10	9	8	7	6	5	4	3	2	1	0
Name	DIN															
Type	R/W															
Reset	0															

DIN 32-bit input data for type 2 bit reverse of FAX data. The action of Type 1 bit reverse is to reverse this word by byte.

CSD+0514h CSD FAX Bit Reverse Type 2 Output Data Register CSD_FAX_BR2_DO

Bit	31	30	29	28	27	26	25	24	23	22	21	20	19	18	17	16
Name	DOUT															
Type	R/W															
Reset	0															
Bit	15	14	13	12	11	10	9	8	7	6	5	4	3	2	1	0
Name	DOUT															
Type	R/W															
Reset	0															

DOUT 32-bit result data for type 2 bit reverse of FAX data.

5.4 FCS Codec

5.4.1 General Description

FCS (Frame Check Sequence) is used to detect errors of the following information bits:

- RLP-frame of CSD services in GSM. The frame length is fixed as 240 or 576 bits including the 24-bit FCS field.
- LLC-frame of GPRS service. The frame length is determined by the information field, and length of the FCS field is 24-bit.

Generation of the frame check sequence is very similar to the CRC coding in baseband signal processing. ETSI GSM specifications 04.22 and 04.64 both define the coding rule. The coding rules are:

1. The CRC shall be ones complement of the modulo-2 sum of:

- the remainder of $x^k \cdot (x^{23}+x^{22}+x^{21}+\ldots+x^2+x+1)$ modulo-2 divided by the generator polynomial, where k is the number of bits of the dividend. (i.e. fill the shift registers with all ones initially before feeding data)
- the remainder of the modulo-2 division by the generator polynomial of the product of x^{24} by the dividend, which are the information bits.

2. The CRC-24 generator polynomial is:

$$G(x)=x^{24}+x^{23}+x^{21}+x^{20}+x^{19}+x^{17}+x^{16}+x^{15}+x^{13}+x^{8}+x^{7}+x^{5}+x^{4}+x^{2}+1$$

3. The 24-bit CRC are appended to the data bits in the MSB-first manner.

4. Decoding is identical to encoding except that data fed into the syndrome circuit is 24-bit longer than the information bits at encoding. The dividend is also multiplied by x^{24}. If no error occurs, the remainder should satisfy

$$R(x)=x^{22}+x^{21}+x^{19}+x^{18}+x^{16}+x^{15}+x^{11}+x^{8}+x^{5}+x^{4}$$ (0x6d8930)

And the parity output word will be 0x9276cf.

In contrast to conventional CRC, this special coding scheme makes the encoder wholly identical to the decoder and simplifies the hardware design.

5.4.2 Register Definitions

FCS+0000h FCS input data register FCS_DATA

Bit	15	14	13	12	11	10	9	8	7	6	5	4	3	2	1	0
Name	D15	D14	D13	D12	D11	D10	D9	D8	D7	D6	D5	D4	D3	D2	D1	D0
Type	WO	WO	WO	WO	WO	WO	WO	WO	WO	WO	WO	WO	WO	WO	WO	WO

THE data bits input. First write of this register is the starting point of the encode or decode process.

DX X=0…15. The input format is $D15 \cdot x^n + D14 \cdot x^{n-1} + D13 \cdot x^{n-2} + \ldots + Dk \cdot x^k + \ldots$, thus D15 is the first bit being pushed into the shift register. If the last data word is less than 16 bits, the rest bits are neglected.

FCS+0004h Input data length indication register FCS_DLEN

Bit	15	14	13	12	11	10	9	8	7	6	5	4	3	2	1	0
Name	LEN															
Type	WO															

THE MCU specifies the total data length in bits to be encoded or decoded.

LEN The data length. A number of multiple-of-8 is required (Number_of_Bytes x 8)

FCS+0x0008h FCS parity output register 1, MSB part FCS_PAR1

Bit	15	14	13	12	11	10	9	8	7	6	5	4	3	2	1	0
Name	P15	P14	P13	P12	P11	P10	P9	P8	P7	P6	P5	P4	P3	P2	P1	P0
Type	RC	RC	RC	RC	RC	RC	RC	RC	RC	RC	RC	RC	RC	RC	RC	RC
Reset	0	0	0	0	0	0	0	0	0	0	0	0	0	0	0	0

FCS+000Ch FCS parity output register 2, LSB part FCS_PAR2

Bit	15	14	13	12	11	10	9	8	7	6	5	4	3	2	1	0
Name									P23	P22	P21	P20	P19	P18	P17	P16
Type									RC	RC	RC	RC	RC	RC	RC	RC
Reset									0	0	0	0	0	0	0	0

PARITY bits output. For FCS_PAR2, bit 8 to bit15 will be filled by zeros when reading.

PX X=0…23. The output format is $P23 \cdot D^{23} + P22 \cdot D^{22} + P21 \cdot D^{21} + \ldots + Pk \cdot D^{k} + \ldots + P1 \cdot D^{1} + P0$, thus P23 is the earliest bit being popped out from the shift register and first appended to the information bits. In other words, {FCS_PAR2[7:0], FCS_PAR1[15:8], FCS_PAR1[7:0] } is the order of appending parity to data.

FCS+0010h FCS codec status register FCS_STAT

Bit	15	14	13	12	11	10	9	8	7	6	5	4	3	2	1	0
Name														BUSY	FER	RDY
Type														RC	RC	RC
Reset														0	0	0

BUSY Since the codec works in serial manner and the data word is input in parallel manner, BUSY = 1 indicates that current data word is being processed and write to FCS_DATA is invalid. BUSY = 0 allows write of FCS_DATA during encode or decode process.

FER Frame error indication, only for decode mode. FER = 0 means no error occurs and FER = 1 means the parity check is failed. Write of FCS_RST.RST or first write of FCS_DATA will reset this bit to 0.

RDY When RDY = 1, the encode or decode process has been finished. For encode, the parity data in FCS_PAR1 and FCS_PAR2 are correctly available. For decode, FCS_STAT.FER indication is valid. Write of FCS_RST.RST or first write of FCS_DATA will reset this bit to 0.

FCS+0014h FCS codec reset register FCS_RST

Bit	15	14	13	12	11	10	9	8	7	6	5	4	3	2	1	0
Name													EN_DE	PAR	BIT	RST
Type													WO	WO	WO	WO

RST RST = 0 resets the CRC coprocessor. Before setup of FCS codec, the MCU needs to set RST = 0 to flush the shift register content before encode or decode.

BIT BIT = 0 means not to invert the bit order in a byte of data words when the codec is running. BIT = 1 means the bit order in a byte written in FCS_DATA should be reversed.

PAR PAR = 0 means not to invert the bit order in a byte of parity words when the codec is running, include reading of FCS_PAR1 and FCS_PAR2. PAR = 1 means bit order of parity words should be reversed, in decoding or encoding.

EN_DE EN_DE = 0 means encode; EN_DE = 1 means decode

6 Multi-Media Subsystem

MT6218B is specially designed to support multi-media terminals. It integrates several hardware based accelerators, like advanced LCD display controller, hardware JPEG decoder and hardware Image Resizer. Besides, MT6218B also incorporates NAND Flash, USB 1.1 Device and SD/MMC/MS/MS Pro Controllers for massive data transfers and storages. This chapter describes those functional blocks in detail.

6.1 LCD Interface

A specific LCD controller is implemented to allow MCU to access external parallel or serial LCD modules and to improve data throughput for color LCD applications.

For parallel LCD modules, this special LCD controller can reuse external memory interface or use dedicated 8-bit parallel interface to access them and 8080 type interface is supported. It can transfer the display data from the internal SRAM or external SRAM/Flash Memory to the off-chip LCD module.

For serial LCD modules, this interface performs parallel to serial conversion and both 8- and 9- bit serial interface is supported. The 8-bit serial interface uses four pins – LSCE#, LSDA, LSCK and LSA0 – to enter commands and data. Meanwhile, the 9-bit serial interface uses three pins – LSCE#, LSDA and LSCK – for the same purpose. Data read is not available with the serial interface and data entered must be 8 bits.

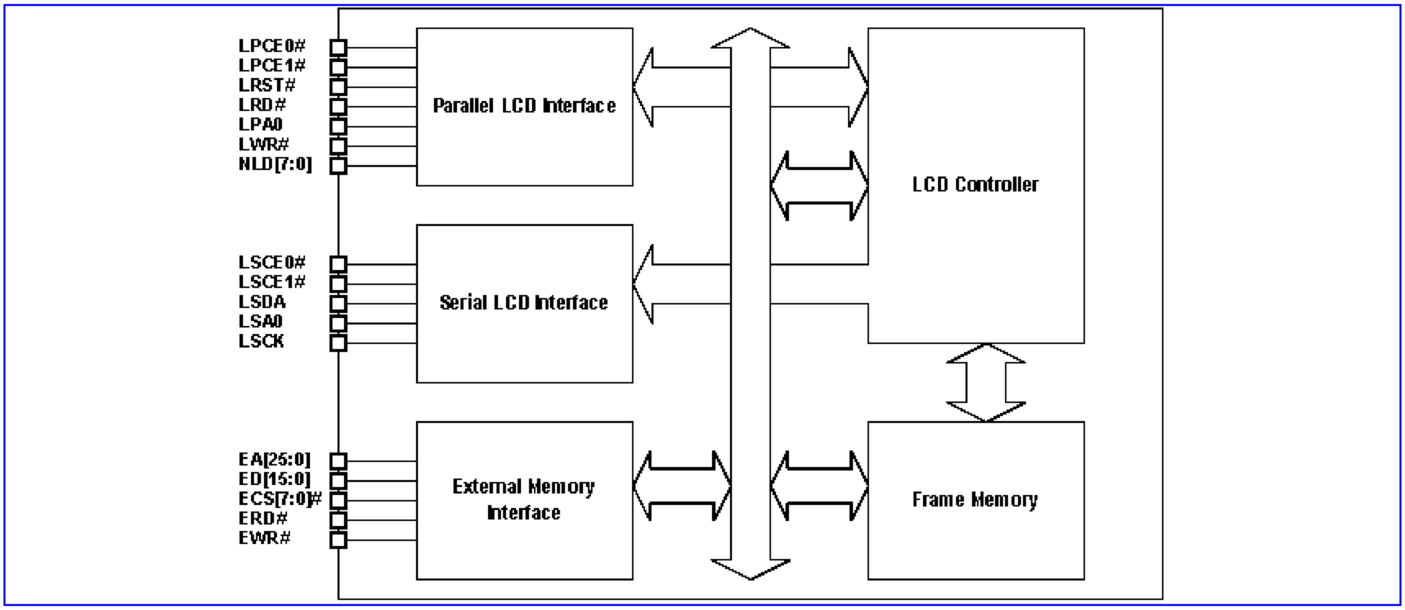

Figure 37 LCD Interface Block Diagram

Figure 38 shows the timing diagram of this serial interface. When the block is idle, LSCK is forced LOW and LSCE# is forced HIGH. Once the data register contains data and the interface is enabled, LSCE# is pulled LOW and remain LOW for the duration of the transmission.

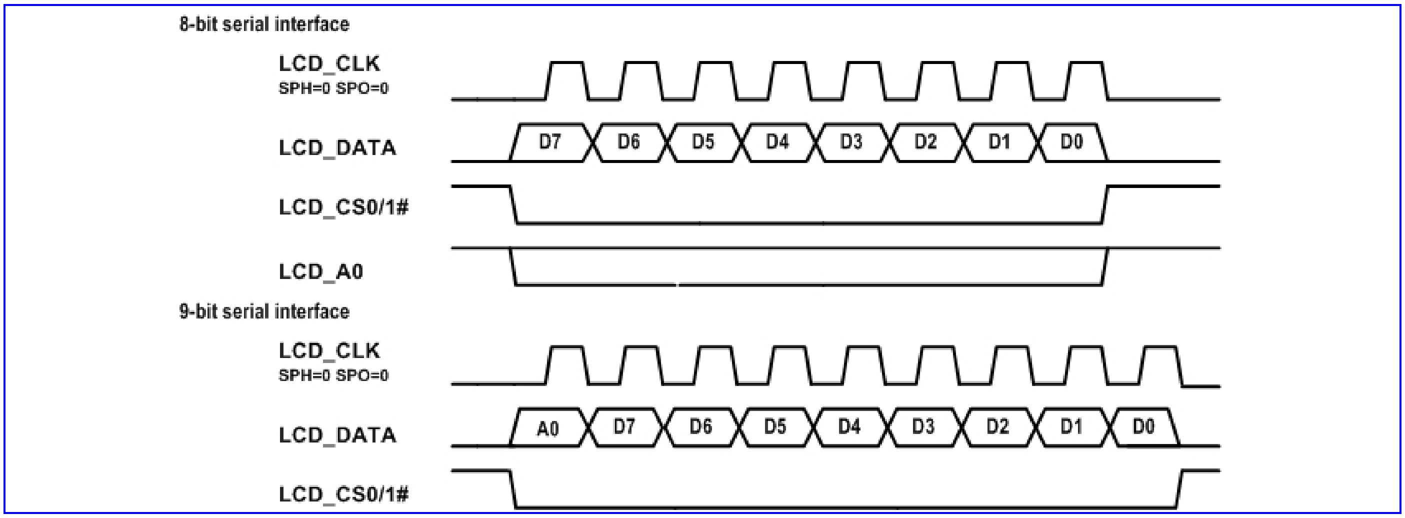

Figure 38 LCD Interface Transfer Timing Diagram

6.1.1 Register Definitions

LCD +0000h LCD Interface Status Register LCD_STA

Bit	15	14	13	12	11	10	9	8	7	6	5	4	3	2	1	0
Name																RUN
Type																R
Reset																0

RUN LCD Interface Running Status

LCD +0004h LCD Interface Interrupt Enable Register LCD_INTEN

Bit	15	14	13	12	11	10	9	8	7	6	5	4	3	2	1	0
Name																CPL
Type																R/W
Reset																0

CPL LCD Frame Transfer Complete Interrupt Control

LCD +0008h LCD Interface Interrupt Status Register LCD_INTSTA

Bit	15	14	13	12	11	10	9	8	7	6	5	4	3	2	1	0
Name																CPL
Type																R
Reset																0

FIELD LCD Frame Transfer Complete Interrupt

LCD +000Ch LCD Interface Frame Transfer Register LCD_START

Bit	15	14	13	12	11	10	9	8	7	6	5	4	3	2	1	0
Name	START															
Type	R/W															
Reset	0															

START Start Control of LCD Frame Transfer

MediaTek Inc. Confidential

LCD +0010h LCD Parallel/Serial Interface Reset Register LCD_RSTB

Bit	15	14	13	12	11	10	9	8	7	6	5	4	3	2	1	0
Name																RSTB
Type																R/W
Reset																1

RSTB Parallel/Serial LCD Module Reset Control

LCD +0014h LCD Serial Interface Configuration Register LCD _SCNF

Bit	15	14	13	12	11	10	9	8	7	6	5	4	3	2	1	0
Name							CSP1	CSP0				8/9	DIV		SPH	SPO
Type							R/W	R/W				R/W	R/W		R/W	R/W
Reset							0	0				0	0		0	0

SPO Clock Polarity Control

SPH Clock Phase Control

DIV Serial Clock Divide Select Bits

8/9 8-bit or 9-bit Interface Selection

CSP0 Serial Interface Chip Select 0 Polarity Control

CSP1 Serial Interface Chip Select 1 Polarity Control

LCD +0018h LCD Parallel Interface Configuration Register LCD_PCNF

Bit	31	30	29	28	27	26	25	24	23	22	21	20	19	18	17	16
Name	C2WS		C2WH		C2RS											SYNC
Type	R/W		R/W		R/W											R/W
Bit	15	14	13	12	11	10	9	8	7	6	5	4	3	2	1	0
Name				WST								RLT				
Type				R/W								R/W				

RLT Read Latency Time

WST Write Wait State Time

SYNC Synchronous Read Mode Control

C2RS Chip Select (LPCE#) to Read Strobe (LRD#) Setup Time

C2WH Chip Select (LPCE#) to Write Strobe (LWR#) Hold Time

C2WS Chip Select (LPCE#) to Write Strobe (LWR#) Setup Time

LCD +0800/0804h LCD Parallel Interface Data Register 0 LCD_PDAT0

Bit	15	14	13	12	11	10	9	8	7	6	5	4	3	2	1	0
Name									DATA							
Type									R/W							

DATA Writing to LCD+0800 will drive LPA0 low while sending this data out in parallel BANK0, otherwise will drive LPA0 high

LCD +0808/080Ch LCD Parallel Interface Data Register 1 LCD_PDAT1

Bit	15	14	13	12	11	10	9	8	7	6	5	4	3	2	1	0
Name									DATA							

Type									R/W							

DATA Writing to LCD+0808 will drive LPA0 low while sending this data out in parallel BANK1, otherwise will drive LPA0 high

LCD +0810/0814h LCD Parallel Interface Data Register 2 LCD_PDAT2

Bit	15	14	13	12	11	10	9	8	7	6	5	4	3	2	1	0
Name									DATA							
Type									R/W							

DATA Writing to LCD+0810 will drive LPA0 low while sending this data out in parallel BANK2, otherwise will drive LPA0 high

LCD +0A00/0A04h LCD Serial Interface Data Register 0 LCD_SDAT0

Bit	15	14	13	12	11	10	9	8	7	6	5	4	3	2	1	0
Name									DATA							
Type									W							

DATA Writing to LCD+0A00 will drive LSA0 low while sending this data out in serial BANK0, otherwise will drive LSA0 high

LCD +0A08/0A0Ch LCD Serial Interface Data Register 1 LCD_SDAT1

Bit	15	14	13	12	11	10	9	8	7	6	5	4	3	2	1	0
Name									DATA							
Type									W							

DATA Writing to LCD+0A08 will drive LSA0 low while sending this data out in serial BANK1, otherwise will drive LSA0 high

LCD +0040h Main Window Size Register LCD_MWINSIZE

Bit	31	30	29	28	27	26	25	24	23	22	21	20	19	18	17	16
Name							ROW									
Type							R/W									
Bit	15	14	13	12	11	10	9	8	7	6	5	4	3	2	1	0
Name							COLUMN									
Type							R/W									

COLUMN Main Window Column Size

ROW Main Window Row Size

LCD +0050h Region of Interest Window Control Register LCD_WROICON

Bit	31	30	29	28	27	26	25	24	23	22	21	20	19	18	17	16
Name	EN0	EN1	EN2	EN3			PERIOD									
Type	R/W	R/W	R/W	R/W			R/W									
Bit	15	14	13	12	11	10	9	8	7	6	5	4	3	2	1	0
Name		ENC	W2M	DISCON	COMMAND					FORMAT						
Type		R/W	R/W	R/W	R/W					R/W						

MediaTek Inc. Confidential

FORMAT LCD Module Data Format

0000000	8bit	1cycle/1pixel	RGB3.3.2	RRRGGGBB
0000001		1cycle/1pixel	RGB3.3.2	BBGGGRRR
0001000		3cycle/2pixel	RGB4.4.4	RRRRGGGG BBBBRRRR GGGGBBBB
0001011		3cycle/2pixel	RGB4.4.4	GGGGRRRR RRRRBBBB BBBBGGGG
0010000		2cycle/1pixel	RGB5.6.5	RRRRRGGG GGGBBBBB
0010011		2cycle/1pixel	RGB5.6.5	GGGRRRRR BBBBBGGG
0011000		3cycle/1pixel	RGB6.6.6	RRRRRRXX GGGGGGXX BBBBBBXX
0011100		3cycle/1pixel	RGB6.6.6	XXRRRRRR XXGGGGGG XXBBBBBB
0100000		3cycle/1pixel	RGB8.8.8	RRRRRRRR GGGGGGGG BBBBBBBB
1000000	16bit	1cycle/2pixel	RGB3.3.2	RRRGGGBBRRRGGGBB
1000010		1cycle/2pixel	RGB3.3.2	RRRGGGBBRRRGGGBB
1000001		1cycle/2pixel	RGB3.3.2	BBGGGRRRBBGGGRRR
1000011		1cycle/2pixel	RGB3.3.2	BBGGGRRRBBGGGRRR
1001100		1cycle/1pixel	RGB4.4.4	XXXXRRRRGGGGBBBB
1001101		1cycle/1pixel	RGB4.4.4	XXXXBBBBGGGGRRRR
1001000		1cycle/1pixel	RGB4.4.4	RRRRGGGGBBBBXXXX
1001001		1cycle/1pixel	RGB4.4.4	BBBBGGGGRRRRXXXX
1010000		1cycle/1pixel	RGB5.6.5	RRRRRGGGGGGBBBBB
1010001		1cycle/1pixel	RGB5.6.5	BBBBBGGGGGGRRRRR
1011100		3cycle/2pixel	RGB6.6.6	XXXXRRRRRRGGGGGG XXXXBBBBBBRRRRRR XXXXGGGGGGBBBBBB
1011111		3cycle/2pixel	RGB6.6.6	XXXXGGGGGGRRRRRR XXXXRRRRRRBBBBBB XXXXBBBBBBGGGGGG
1011000		3cycle/2pixel	RGB6.6.6	RRRRRRGGGGGGXXXX BBBBBBRRRRRRXXXX GGGGGGBBBBBBXXXX
1011011		3cycle/2pixel	RGB6.6.6	GGGGGGRRRRRRXXXX RRRRRRBBBBBBXXXX

MediaTek Inc. Confidential

				BBBBBBGGGGGGXXXX
1100000		3cycle/2pixel	RGB8.8.8	RRRRRRRRGGGGGGGG BBBBBBBBRRRRRRRR GGGGGGGGBBBBBBBB
1100011		3cycle/2pixel	RGB8.8.8	GGGGGGGGRRRRRRRR RRRRRRRRBBBBBBBB BBBBBBBBRRRRRRRR

COMMAND Number of Commands to be sent to LCD module

DISCON Block Write Enable Control. By setting both DISCON and W2M to 1, this LCD accelerator will update the ROI window within the MAIN Window

W2M Enable Data Address Increasing After Each Data Transfer

ENC Command Transfer Enable Control

PERIOD Waiting Period Between Two Consecutive Data Transfers

ENn Layer Window Enable Control

LCD +0054h Region of Interest Window Offset Register LCD_WROIOFS

Bit	31	30	29	28	27	26	25	24	23	22	21	20	19	18	17	16
Name							Y-OFFSET									
Type							R/W									
Bit	15	14	13	12	11	10	9	8	7	6	5	4	3	2	1	0
Name							X-OFFSET									
Type							R/W									

X-OFFSET ROI Window Column Offset

Y-OFFSET ROI Window Row Offset

LCD +0058h Region of Interest Window Command Start Address Register LCD_WROICADD

Bit	31	30	29	28	27	26	25	24	23	22	21	20	19	18	17	16
Name	ADDR															
Type	R/W															
Bit	15	14	13	12	11	10	9	8	7	6	5	4	3	2	1	0
Name	ADDR															
Type	R/W															

ADDR ROI Window Command Address

LCD +005Ch Region of Interest Window Data Start Address Register LCD_WROIDADD

Bit	31	30	29	28	27	26	25	24	23	22	21	20	19	18	17	16
Name	ADDR															
Type	R/W															
Bit	15	14	13	12	11	10	9	8	7	6	5	4	3	2	1	0
Name	ADDR															
Type	R/W															

ADDR ROI Window Data Address

MediaTek Inc. Confidential

LCD +00600h Region of Interest Window Size Register LCD_WROISIZE

Bit	31	30	29	28	27	26	25	24	23	22	21	20	19	18	17	16
Name							ROW									
Type							R/W									
Bit	15	14	13	12	11	10	9	8	7	6	5	4	3	2	1	0
Name							COLUMN									
Type							R/W									

COLUMN ROI Window Column Size

ROW ROI Window Row Size

LCD +0070h Layer 0 Window Control Register LCD_L0WINCON

Bit	31	30	29	28	27	26	25	24	23	22	21	20	19	18	17	16
Name	SRCKEY															
Type	R/W															
Bit	15	14	13	12	11	10	9	8	7	6	5	4	3	2	1	0
Name		KEYEN				PLAEN	PLA0/1	OPAEN	OPA							
Type		R/W				R/W	R/W	R/W	R/W							

OPA Opacity Value Setting

OPAEN Opacity Enable Control

PLA0/1 Color Palette Selection

PLAEN Color Palette Enable Control

KEYEN Source Key Enable Control

SRCKEY Source Key Value

LCD +0074h Layer 0 Window Display Offset Register LCD_L0WINOFS

Bit	31	30	29	28	27	26	25	24	23	22	21	20	19	18	17	16
Name							Y-OFFSET									
Type							R/W									
Bit	15	14	13	12	11	10	9	8	7	6	5	4	3	2	1	0
Name							X-OFFSET									
Type							R/W									

Y-OFFSET Layer 0 Window Row Offset

X-OFFSET Layer 0 Window Column Offset

+0078h Layer 0 Window Display Start Address Register LCD_L0WINADD

Bit	31	30	29	28	27	26	25	24	23	22	21	20	19	18	17	16
Name	ADDR															
Type	R/W															
Bit	15	14	13	12	11	10	9	8	7	6	5	4	3	2	1	0
Name	ADDR															
Type	R/W															

ADDR Layer 0 Window Data Address

LCD +007Ch Layer 0 Window Size LCD_L0WINSIZE

Bit	31	30	29	28	27	26	25	24	23	22	21	20	19	18	17	16
Name							ROW									
Type							R/W									
Bit	15	14	13	12	11	10	9	8	7	6	5	4	3	2	1	0
Name							COLUMN									
Type							R/W									

ROW Layer 0 Window Row Size

COLUMN Layer 0 Window Column Size

LCD +0080h Layer 1 Window Control Register LCD_L1WINCON

Bit	31	30	29	28	27	26	25	24	23	22	21	20	19	18	17	16
Name	SRCKEY															
Type	R/W															
Bit	15	14	13	12	11	10	9	8	7	6	5	4	3	2	1	0
Name		KEYEN				PLAEN	PLA0/1	OPAEN	OPA							
Type		R/W				R/W	R/W	R/W	R/W							

OPA Opacity Value Setting

OPAEN Enable Opacity Control

PLA0/1 Color Palette Selection

PLAEN Color Palette Enable Control

KEYEN Source Key Enable Control

SRCKEY Source-Key

LCD +0084h Layer 1 Window Display Offset Register LCD_L1WINOFS

Bit	31	30	29	28	27	26	25	24	23	22	21	20	19	18	17	16
Name							Y-OFFSET									
Type							R/W									
Bit	15	14	13	12	11	10	9	8	7	6	5	4	3	2	1	0
Name							X-OFFSET									
Type							R/W									

X-OFFSET Layer 1 Window Row Offset

Y-OFFSET Layer 1 Window Colum Offset

LCD +0088h Layer 1 Window Display Start Address Register LCD_L1WINADD

Bit	31	30	29	28	27	26	25	24	23	22	21	20	19	18	17	16
Name	ADDR															
Type	R/W															
Bit	15	14	13	12	11	10	9	8	7	6	5	4	3	2	1	0
Name	ADDR															
Type	R/W															

ADDR Layer 1 Window Data Address

LCD +008Ch Layer 1 Window Size LCD_L1WINSIZE

Bit	31	30	29	28	27	26	25	24	23	22	21	20	19	18	17	16
Name							ROW									
Type							R/W									
Bit	15	14	13	12	11	10	9	8	7	6	5	4	3	2	1	0
Name							COLUMN									
Type							R/W									

COLUMN Layer 1 Window Column Size

ROW Layer 1 Window Row Size

LCD +0090h Layer 2 Window Control Register LCD_L2WINCON

Bit	31	30	29	28	27	26	25	24	23	22	21	20	19	18	17	16
Name	SRCKEY															
Type	R/W															
Bit	15	14	13	12	11	10	9	8	7	6	5	4	3	2	1	0
Name		KEYEN				PLAEN	PLA0/1	OPAEN	OPA							
Type		R/W				R/W	R/W	R/W	R/W							

OPA Opacity Value Setting

OPAEN Enable Opacity Control

PLA0/1 Color Palette Selection

PLAEN Color Palette Enable Control

KEYEN Source Key Enable Control

SRCKEY Source-Key

LCD +0094h Layer 2 Window Display Offset Register LCD_L2WINOFS

Bit	31	30	29	28	27	26	25	24	23	22	21	20	19	18	17	16
Name							Y-OFFSET									
Type							R/W									
Bit	15	14	13	12	11	10	9	8	7	6	5	4	3	2	1	0
Name							X-OFFSET									
Type							R/W									

X-OFFSET Layer 2 Window Column Offset

Y-OFFSET Layer 2 Window Row Offset

LCD +0098h Layer 2 Window Display Start Address Register LCD_L2WINADD

Bit	31	30	29	28	27	26	25	24	23	22	21	20	19	18	17	16
Name	ADDR															
Type	R/W															
Bit	15	14	13	12	11	10	9	8	7	6	5	4	3	2	1	0
Name	ADDR															
Type	R/W															

ADDR Layer 2 Window Data Address

LCD +009Ch Layer 2 Window Size LCD_L2WINSIZE

Bit	31	30	29	28	27	26	25	24	23	22	21	20	19	18	17	16
Name							ROW									
Type							R/W									
Bit	15	14	13	12	11	10	9	8	7	6	5	4	3	2	1	0
Name							COLUMN									
Type							R/W									

COLUMN Layer 2 Window Column Size

ROW Layer 2 Window Row Size

LCD +00A0h Layer 3 Window Control Register LCD_L3WINCON

Bit	31	30	29	28	27	26	25	24	23	22	21	20	19	18	17	16
Name	SRCKEY															
Type	R/W															
Bit	15	14	13	12	11	10	9	8	7	6	5	4	3	2	1	0
Name		KEYEN				PLAEN	PLA0/1	OPAEN	OPA							
Type		R/W				R/W	R/W	R/W	R/W							

OPA Opacity Value Setting

OPAEN Enable Opacity Control

PLA0/1 Color Palette Selection

PLAEN Color Palette Enable Control

KEYEN Source Key Enable Control

SRCKEY Source-Key

LCD +00A4h Layer 3 Window Display Offset Register LCD_L3WINOFS

Bit	31	30	29	28	27	26	25	24	23	22	21	20	19	18	17	16
Name							Y-OFFSET									
Type							R/W									
Bit	15	14	13	12	11	10	9	8	7	6	5	4	3	2	1	0
Name							X-OFFSET									
Type							R/W									

X-OFFSET Layer 3 Window Column Offset

Y-OFFSET Layer 3 Window Row Offset

LCD +00A8h Layer 3 Window Display Start Address Register LCD_L3WINADD

Bit	31	30	29	28	27	26	25	24	23	22	21	20	19	18	17	16
Name	ADDR															
Type	R/W															
Bit	15	14	13	12	11	10	9	8	7	6	5	4	3	2	1	0
Name	ADDR															
Type	R/W															

ADDR Layer 3 Window Data Address

LCD +00ACh Layer 3 Window Size LCD_L3WINSIZE

Bit	31	30	29	28	27	26	25	24	23	22	21	20	19	18	17	16
Name							ROW									
Type							R/W									
Bit	15	14	13	12	11	10	9	8	7	6	5	4	3	2	1	0
Name							COLUMN									
Type							R/W									

COLUMN Layer 3 Window Column Size

ROW Layer 3 Window Row Size

LCD +0200h~03FCh LCD Interface Color Palette LUT 0 Registers LCD_PAL0

Bit	31	30	29	28	27	26	25	24	23	22	21	20	19	18	17	16
Name	LUT0															
Type	R/W															
Bit	15	14	13	12	11	10	9	8	7	6	5	4	3	2	1	0
Name	LUT0															
Type	R/W															

LUT0 These Bits Set LUT0 Data in RGB565 Format

LCD +0400h~05FCh LCD Interface Color Palette LUT 1 Registers LCD_PAL1

Bit	31	30	29	28	27	26	25	24	23	22	21	20	19	18	17	16
Name	LUT1															
Type	R/W															
Bit	15	14	13	12	11	10	9	8	7	6	5	4	3	2	1	0
Name	LUT1															
Type	R/W															

LUT1 These Bits Set LUT1 Data in RGB565 Format

LCD +0600h~063C LCD Interface Command/Parameter Registers LCD_COMD

Bit	31	30	29	28	27	26	25	24	23	22	21	20	19	18	17	16
Name	A0								COMM							
Type	R/W								R/W							
Bit	15	14	13	12	11	10	9	8	7	6	5	4	3	2	1	0
Name	A0								COMM							
Type	R/W								R/W							

COMM Command Data and Parameter Data for LCD Module

A0 LSA0 Pin Polarity Control

6.2 JPEG Decoder

6.2.1 Overview

To boost JPEG image processing performance, a hardware block is preferred to aid software and deal with JPEG file as much as possible. As a result, JPEG Decoder is designed to decode all baseline and progressive JPEG images with all YUV sampling frequencies combinations. To gain the speed performance with our best, JPEG decoder will handle all portions of

JPEG files except the 17-byte SOF marker. The software program only needs to program related control registers based on the SOF marker and wait for an interrupt coming from hardware. Take into consideration the limited size of memories, hardware also supports multiple runs of JPEG progressive images and breakpoints insertion in huge JPEG files. Multiple runs can reduce memory usage largely by 1/N where N is the number of runs. Breakpoints insertion allows software to load partial JPEG file from external flash to internal memory if the JPEG file is too large to sit in internally in one time.

6.2.2 Register Definitions

JPEG+0000h JPEG Decoder Control Register JPEG_FILE_ADDR

Bit	31	30	29	28	27	26	25	24	23	22	21	20	19	18	17	16
Name	FILE_ADDR[31:16]															
Type	R/W	R/W	R/W	R/W	R/W	R/W	R/W	R/W	R/W	R/W	R/W	R/W	R/W	R/W	R/W	R/W
Bit	15	14	13	12	11	10	9	8	7	6	5	4	3	2	1	0
Name	FILE_ADDR[15:0]															
Type	R/W	R/W	R/W	R/W	R/W	R/W	R/W	R/W	R/W	R/W	R/W	R/W	R/W	R/W	R/W	R/W

The JPEG file starting address must be a multiple of 4. Not affected by global reset and jpeg decoder abort.

FILE_ADDR Starting physical address of input JPEG file in SRAM

JPEG+0004h JPEG Decoder Control Register TBLS_START_ADDR

Bit	31	30	29	28	27	26	25	24	23	22	21	20	19	18	17	16
Name	START_ADDR[31:16]															
Type	R/W	R/W	R/W	R/W	R/W	R/W	R/W	R/W	R/W	R/W	R/W	R/W	R/W	R/W	R/W	R/W
Bit	15	14	13	12	11	10	9	8	7	6	5	4	3	2	1	0
Name	START_ADDR[15:11]															
Type	R/W	R/W	R/W	R/W	R/W											

The table starting address must be a multiple of 2K. Not affected by global reset and jpeg decoder abort. Need reprogramming for multiple runs of progressive images.

START_ADDR The starting address of the memory space for 4 quantization tables and 8 Huffman tables. The memory space must be 2K Bytes at least.

JPEG+0008h JPEG Decoder Control Register SAMP_FACTOR

Bit	31	30	29	28	27	26	25	24	23	22	21	20	19	18	17	16
Name																
Type																
Bit	15	14	13	12	11	10	9	8	7	6	5	4	3	2	1	0
Name					H_SAMP_0[1:0]		V_SAMP_0[1:0]		H_SAMP_1[1:0]		V_SAMP_1[1:0]		H_SAMP_2[1:0]		V_SAMP_2[1:0]	
Type					R/W		R/W		R/W		R/W		R/W		R/W	

This register contains the sampling factor of YUV components. Not affected by global reset and jpeg decoder abort.

H_SAMP_0 Horizontal sampling factor of the 1st component, Y.

- **00** SF is 1
- **01** SF is 2
- **10** Invalid
- **11** SF is 4

V_SAMP_0 Vertical sampling factor of the 1st component, Y.

- **00** SF is 1
- **01** SF is 2
- **10** Invalid
- **11** SF is 4

H_SAMP_1 Horizontal sampling factor of the 2nd component, U.

- **00** SF is 1
- **01** SF is 2
- **10** Invalid
- **12** SF is 4

V_SAMP_1 Vertical sampling factor of the 2nd component, U.

- **00** SF is 1
- **01** SF is 2
- **10** Invalid
- **11** SF is 4

H_SAMP_2 Horizontal sampling factor of the 3rd component, V.

- **00** SF is 1
- **01** SF is 2
- **10** Invalid
- **13** SF is 4

V_SAMP_2 Vertical sampling factor of the 3rd component, V.

- **00** SF is 1
- **01** SF is 2
- **10** Invalid
- **11** SF is 4

JPEG+000Ch JPEG Decoder Control Register COMP_ID

Bit	31	30	29	28	27	26	25	24	23	22	21	20	19	18	17	16
Name	COMP0_ID[7:0]								COMP1_ID[7:0]							
Type	R/W								R/W							
Bit	15	14	13	12	11	10	9	8	7	6	5	4	3	2	1	0
Name	COMP2_ID[7:0]															
Type	R/W															

This register contains the IDs of YUV components. Not affected by global reset and jpeg decoder abort.

COMP0_ID The 1st component (Y) ID extracted from SOF marker.

COMP1_ID The 2nd component (U) ID extracted from SOF marker.

COMP2_ID The 3rd component (V) ID extracted from SOF marker.

JPEG+0010h JPEG Decoder Control Register TOTAL_MCU_NUM

Bit	31	30	29	28	27	26	25	24	23	22	21	20	19	18	17	16
Name	TOTAL_MCU_NUM[31:16]															
Type	R/W															
Bit	15	14	13	12	11	10	9	8	7	6	5	4	3	2	1	0
Name	TOTAL_MCU_NUM[15:0]															
Type	R/W															

This register contains the total MCU number in interleaved scan. Note that if the MCU number is N, program (N-1) into this register. Not affected by global reset and jpeg decoder abort.

JPEG+0014h JPEG Decoder Control Register INTLV_MCU_NUM_PER_MCU_ROW

Bit	31	30	29	28	27	26	25	24	23	22	21	20	19	18	17	16
Name																
Type																
Bit	15	14	13	12	11	10	9	8	7	6	5	4	3	2	1	0
Name							INTLV_MCU_NUM_PER_MCU_ROW[9:0]									
Type							R/W									

This register contains the MCU number per row in interleaved scan. Not affected by global reset and jpeg decoder abort.

JPEG+0018h JPEG Decoder Control Register COMP0_NONINTLV_DU_NUM_PER_MCU_ROW

Bit	31	30	29	28	27	26	25	24	23	22	21	20	19	18	17	16
Name																
Type																
Bit	15	14	13	12	11	10	9	8	7	6	5	4	3	2	1	0
Name			DUMMY_DU				COMP0_NONINTLV_MCU_NUM_PER_MCU_ROW[9:0]									
Type			R/W				R/W									

This register contains the MCU number per row in non-interleaved scan of the 1st component (Y). Not affected by global reset and jpeg decoder abort. Note that COMP0_NONINTLV_MCU_NUM_PER_MCU_ROW includes the number of DUMMY_DU if any.

DUMMY_DU Dummy data unit number in non-interleaved scan of the 1st component

- **00** no dummy data unit
- **01** one dummy data unit
- **10** two dummy data units
- **11** three dummy data units

COMP0_NONINTLV_MCU_NUM_PER_MCU_ROW The MCU number per row in non-interleaved scan of the 1st component (Y).

In progressive image, dummy data unit columns are inevitable if more than 8 redundant pixel columns are transmitted to fill up the last MCU in a MCU row. For example, in 422 format, a MCU is composed of 16 x 16 pixels. If a given image size is 355 x 400, for JPEG encoder to compress, the image will grow to 368 x 400 first such that both width and height are multiples of 16. It can be seen that to be dividable by 16, there are 13 redundant Y-component pixels in horizontal (width) direction. These 13 Y-component pixels will be compressed by encoders in interleaved scans because a complete MCU will need 16 x 16 pixels. It is different though in non-interleaved scans because in non-interleaved scans a complete MCU only needs 8 x 8 Y-component pixels. Therefore among the 13 redundant pixels the first 5 will still be compressed as interleaved scans while the last 8 will be dropped. In this case, software must program the DUMMY_DU field to 1 so the hardware will know one 8 x 8 data unit should be skipped at the last of a MCU row in non-interleaved scan.

JPEG+001Ch JPEG Decoder Control Register COMP1_NONINTLV_DU_NUM_PER_MCU_ROW

Bit	31	30	29	28	27	26	25	24	23	22	21	20	19	18	17	16
Name																
Type																
Bit	15	14	13	12	11	10	9	8	7	6	5	4	3	2	1	0
Name			DUMMY_DU				COMP1_NONINTLV_MCU_NUM_PER_MCU_ROW[9:0]									
Type			R/W				R/W									

This register contains the MCU number per row in non-interleaved scan of the 2nd component (Y). Not affected by global reset and jpeg decoder abort. Note that COMP1_NONINTLV_MCU_NUM_PER_MCU_ROW includes the number of DUMMY_DU if any.

DUMMY_DU Dummy data unit number in non-interleaved scan of the 2nd component

- **00** no dummy data unit
- **01** one dummy data unit
- **10** two dummy data units
- **11** three dummy data units

COMP1_NONINTLV_MCU_NUM_PER_MCU_ROW The MCU number per row in non-interleaved scan of the 2nd component (U).

JPEG+0020h JPEG Decoder Control Register COMP2_NONINTLV_DU_NUM_PER_MCU_ROW

Bit	31	30	29	28	27	26	25	24	23	22	21	20	19	18	17	16
Name																
Type																
Bit	15	14	13	12	11	10	9	8	7	6	5	4	3	2	1	0
Name			DUMMY_DU				COMP2_NONINTLV_MCU_NUM_PER_MCU_ROW[9:0]									
Type			R/W				R/W									

This register contains the MCU number per row in non-interleaved scan of the 3rd component (V). Not affected by global reset and jpeg decoder abort. Note that COMP2_NONINTLV_MCU_NUM_PER_MCU_ROW includes the number of DUMMY_DU if any.

DUMMY_DU Dummy data unit number in non-interleaved scan of the 3rd component

- **00** no dummy data unit
- **01** one dummy data unit
- **10** two dummy data units
- **11** three dummy data units

COMP2_NONINTLV_MCU_NUM_PER_MCU_ROW The MCU number per row in non-interleaved scan of the 3rd component (V).

JPEG+0024h JPEG Decoder Control Register COMP0_DATA_UNIT_NUM

Bit	31	30	29	28	27	26	25	24	23	22	21	20	19	18	17	16
Name	COMP0_DATA_UNIT_NUM[31:16]															

MediaTek Inc. Confidential

Type	R/W															
Bit	15	14	13	12	11	10	9	8	7	6	5	4	3	2	1	0
Name	COMP0_DATA_UNIT_NUM[15:0]															
Type	R/W															

This register contains the 8x8 data unit number of the 1st component in non-interleaved scans. Note that if the data unit number is N, program (N-1) into this register. Not affected by global reset and jpeg decoder abort.

JPEG+0028h JPEG Decoder Control Register COMP1_DATA_UNIT_NUM

Bit	31	30	29	28	27	26	25	24	23	22	21	20	19	18	17	16
Name	COMP1_DATA_UNIT_NUM[31:16]															
Type	R/W															
Bit	15	14	13	12	11	10	9	8	7	6	5	4	3	2	1	0
Name	COMP1_DATA_UNIT_NUM[15:0]															
Type	R/W															

This register contains the 8x8 data unit number of the 2nd component in non-interleaved frame. Note that if the data unit number is N, program (N-1) into this register. Not affected by global reset and jpeg decoder abort.

JPEG+002Ch JPEG Decoder Control Register COMP2_DATA_UNIT_NUM

Bit	31	30	29	28	27	26	25	24	23	22	21	20	19	18	17	16
Name	COMP2_DATA_UNIT_NUM[31:16]															
Type	R/W															
Bit	15	14	13	12	11	10	9	8	7	6	5	4	3	2	1	0
Name	COMP2_DATA_UNIT_NUM[15:0]															
Type	R/W															

This register contains the 8x8 data unit number of the 3rd component in non-interleaved frame. Note that if the data unit number is N, program (N-1) into this register. Not affected by global reset and jpeg decoder abort.

JPEG+0030h JPEG Decoder Control Register COMP0_PROGR_COEFF_START_ADDR

Bit	31	30	29	28	27	26	25	24	23	22	21	20	19	18	17	16
Name	COMP0_PROGR_COEFF_START_ADDR[31:16]															
Type	R/W															
Bit	15	14	13	12	11	10	9	8	7	6	5	4	3	2	1	0
Name	COMP0_PROGR_COEFF_START_ADDR[15:0]															
Type	R/W															

This register contains the starting address of the memory space storing the intermediate progressive coefficients of the 1st component. This value must be a multiple of 4. Not affected by global reset and jpeg decoder abort.

JPEG+0034h JPEG Decoder Control Register COMP1_PROGR_COEFF_START_ADDR

Bit	31	30	29	28	27	26	25	24	23	22	21	20	19	18	17	16
Name	COMP1_PROGR_COEFF_START_ADDR[31:16]															
Type	R/W															
Bit	15	14	13	12	11	10	9	8	7	6	5	4	3	2	1	0
Name	COMP1_PROGR_COEFF_START_ADDR[15:0]															
Type	R/W															

This register contains the starting address of the memory space storing the intermediate progressive coefficients of the 2nd component. This value must be a multiple of 4. Not affected by global reset and jpeg decoder abort.

JPEG+0038h JPEG Decoder Control Register COMP2_PROGR_COEFF_START_ADDR

Bit	31	30	29	28	27	26	25	24	23	22	21	20	19	18	17	16
Name	COMP2_PROGR_COEFF_START_ADDR[31:16]															
Type	R/W															
Bit	15	14	13	12	11	10	9	8	7	6	5	4	3	2	1	0
Name	COMP2_PROGR_COEFF_START_ADDR[15:0]															
Type	R/W															

This register contains the starting address of the memory space storing the intermediate progressive coefficients of the 3rd component. This value must be a multiple of 4. Not affected by global reset and jpeg decoder abort.

JPEG+003Ch JPEG Decoder Control Register JPEG_CTRL

Bit	31	30	29	28	27	26	25	24	23	22	21	20	19	18	17	16
Name		JPEG_MODE	DU9[2:0]			DU8[2:0]			DU7[2:0]			DU6[2:0]			DU5[2:0]	
Type		R/W	R/W			R/W			R/W			R/W			R/W	
Bit	15	14	13	12	11	10	9	8	7	6	5	4	3	2	1	0
Name		DU4[2:0]			DU3[2:0]			DU2[2:0]			DU1[2:0]			DU0[2:0]		
Type		R/W			R/W			R/W			R/W			R/W		

This register contains 2 information: the operating mode of JPEG decoder and the order of 3 components in a MCU. Affected by global reset and jpeg decoder abort. Need reprogramming for multiple runs of progressive images.

JPEG_MODE The operating mode of JPEG decoder.

- **0** Baseline mode
- **1** Progressive mode

DU9 The 10th data unit component category in a MCU

- **100** The 10th data unit is the 1st component (Y)
- **101** The 10th data unit is the 2nd component (U)
- **110** The 10th data unit is the 3rd component (V)
- **111** Not used in current frame
- **000-011** Invalid

DU8 The 9th data unit component category in a MCU

100 The 9th data unit is the 1st component (Y)
101 The 9th data unit is the 2nd component (U)
110 The 9th data unit is the 3rd component (V)
111 Not used in current frame
000-011 Invalid

DU7 The 8th data unit component category in a MCU

100 The 8th data unit is the 1st component (Y)
101 The 8th data unit is the 2nd component (U)
110 The 8th data unit is the 3rd component (V)
111 Not used in current frame
000-011 Invalid

DU6 The 7th data unit component category in a MCU

100 The 7th data unit is the 1st component (Y)
101 The 7th data unit is the 2nd component (U)
110 The 7th data unit is the 3rd component (V)
111 Not used in current frame
000-011 Invalid

DU5 The 6th data unit component category in a MCU

100 The 6th data unit is the 1st component (Y)
101 The 6th data unit is the 2nd component (U)
110 The 6th data unit is the 3rd component (V)
111 Not used in current frame
000-011 Invalid

DU4 The 5th data unit component category in a MCU

100 The 5th data unit is the 1st component (Y)
101 The 5th data unit is the 2nd component (U)
110 The 5th data unit is the 3rd component (V)
111 Not used in current frame
000-011 Invalid

DU3 The 4th data unit component category in a MCU

100 The 4th data unit is the 1st component (Y)
101 The 4th data unit is the 2nd component (U)
110 The 4th data unit is the 3rd component (V)
111 Not used in current frame
000-011 Invalid

DU2 The 3rd data unit component category in a MCU

100 The 3rd data unit is the 1st component (Y)
101 The 3rd data unit is the 2nd component (U)
110 The 3rd data unit is the 3rd component (V)
111 Not used in current frame
000-011 Invalid

DU1 The 2nd data unit component category in a MCU

100 The 2nd data unit is the 1st component (Y)

MediaTek Inc. Confidential

101 The 2nd data unit is the 2nd component (U)

110 The 2nd data unit is the 3rd component (V)

111 Not used in current frame

000-011 Invalid

DU0 The 1st data unit component category in a MCU

100 The 1st data unit is the 1st component (Y)

101 The 1st data unit is the 2nd component (U)

110 The 1st data unit is the 3rd component (V)

111 Not used in current frame

000-011 Invalid

JPEG+0040h JPEG Decoder Control Register JPEG_DEC_TRIG

Bit	31	30	29	28	27	26	25	24	23	22	21	20	19	18	17	16
Name																
Type	W															
Bit	15	14	13	12	11	10	9	8	7	6	5	4	3	2	1	0
Name																
Type	W															

JPEG_DEC_TRIG will trigger JPEG decoding operation no matter what value is programmed.

JPEG+0044h JPEG Decoder Control Register JPEG_DEC_ABORT

Bit	31	30	29	28	27	26	25	24	23	22	21	20	19	18	17	16
Name																
Type	W															
Bit	15	14	13	12	11	10	9	8	7	6	5	4	3	2	1	0
Name																
Type	W															

JPEG_DEC_ABORT will abort JPEG decoding operation and reset JPEG decoder hardware no matter what value is programmed.

JPEG+0048h JPEG Decoder Control Register JPEG_FILE_BRP

Bit	31	30	29	28	27	26	25	24	23	22	21	20	19	18	17	16
Name	JPEG_FILE_BRP[31:16]															
Type	R/W															
Bit	15	14	13	12	11	10	9	8	7	6	5	4	3	2	1	0
Name	JPEG_FILE_BRP[15:0]															
Type	R/W															

JPEG_DEC_BRP stands for a 32-bit byte breakpoint address that hardware will stall once the breakpoint address is encountered. This control register provides a solution for software to swap internal memory content with external memory in case that JPEG source file is too big for internal memory to store at one time. A breakpoint interrupt will fire when hardware DMA address hits the breakpoint address. Note that the breakpoint address must be a multiple of 4. Not affected by global reset and jpeg decoder abort.

JPEG+004Ch JPEG Decoder Control Register JPEG_FILE_TOTAL_SIZE

Bit	31	30	29	28	27	26	25	24	23	22	21	20	19	18	17	16
Name	JPEG_FILE_TOTAL_SIZE[31:16]															
Type	R/W															
Bit	15	14	13	12	11	10	9	8	7	6	5	4	3	2	1	0
Name	JPEG_FILE_TOTAL_SIZE[15:0]															
Type	R/W															

JPEG_FILE_TOTAL_SIZE represents the JPEG source file size in bytes. Hardware will fire a file overflow interrupt and stall if the DMA address equals to this address. Note that the breakpoint address must be a multiple of 4. If the file size is not able to be divided by 4, increment the size value until it is. Not affected by global reset and jpeg decoder abort. Not affected by global reset and jpeg decoder abort.

JPEG+0050h JPEG Decoder Control Register INTLV_FIRST_MCU_INDEX

Bit	31	30	29	28	27	26	25	24	23	22	21	20	19	18	17	16
Name													INTLV_FIRST_MCU_INDEX[19:16]			
Type													R/W			
Bit	15	14	13	12	11	10	9	8	7	6	5	4	3	2	1	0
Name	INTLV_FIRST_MCU_INDEX[15:0]															
Type	R/W															

This control register specifies the first MCU index that hardware will process in the interleaved scans of the current image. The JPEG decoder is able to skip certain MCUs by defining the first and last MCU index. If an image is expected to show in a whole, program this register to 0. Not affected by global reset and jpeg decoder abort.

JPEG+0054h JPEG Decoder Control Register INTLV_LAST_MCU_INDEX

Bit	31	30	29	28	27	26	25	24	23	22	21	20	19	18	17	16
Name													INTLV_LAST_MCU_INDEX[19:16]			
Type													R/W			
Bit	15	14	13	12	11	10	9	8	7	6	5	4	3	2	1	0
Name	INTLV_LAST_MCU_INDEX[15:0]															
Type	R/W															

This control register specifies the last MCU index that hardware will process in the interleaved scans of the current image. The JPEG decoder is able to skip certain MCUs by defining the first and last MCU index. If an image is expected to show in a whole, be sure this register value is more than the total MCU number.(make it 0xfffff if possible in this case). Not affected by global reset and jpeg decoder abort.

JPEG+0058h JPEG Decoder Control Register COMP0_FIRST_MCU_INDEX

Bit	31	30	29	28	27	26	25	24	23	22	21	20	19	18	17	16
Name													COMP0_FIRST_MCU_INDEX[19:16]			

Type													R/W			
Bit	15	14	13	12	11	10	9	8	7	6	5	4	3	2	1	0
Name	COMP0_FIRST_MCU_INDEX[15:0]															
Type	R/W															

Only effective in progressive images. This control register specifies the first MCU index that hardware will process in the non-interleaved scans containing Y component of the current image. The JPEG decoder is able to skip certain MCUs by defining the first and last MCU index. If an image is expected to show in a whole, program this register to 0. Not affected by global reset and jpeg decoder abort.

JPEG+005Ch JPEG Decoder Control Register COMP0_LAST_MCU_INDEX

Bit	31	30	29	28	27	26	25	24	23	22	21	20	19	18	17	16
Name													COMP0_LAST_MCU_INDEX[19:16]			
Type													R/W			
Bit	15	14	13	12	11	10	9	8	7	6	5	4	3	2	1	0
Name	COMP0_LAST_MCU_INDEX[15:0]															
Type	R/W															

Only effective in progressive images. This control register specifies the last MCU index that hardware will process in the non-interleaved scans containing Y component of the current image. The JPEG decoder is able to skip certain MCUs by defining the first and last MCU index. If an image is expected to show in a whole, be sure this register value is more than the total MCU number.(make it 0xfffff if possible in this case). Not affected by global reset and jpeg decoder abort.

JPEG+0060h JPEG Decoder Control Register COMP1_FIRST_MCU_INDEX

Bit	31	30	29	28	27	26	25	24	23	22	21	20	19	18	17	16
Name													COMP1_FIRST_MCU_INDEX[19:16]			
Type													R/W			
Bit	15	14	13	12	11	10	9	8	7	6	5	4	3	2	1	0
Name	COMP1_FIRST_MCU_INDEX[15:0]															
Type	R/W															

Only effective in progressive images. This control register specifies the first MCU index that hardware will process in the non-interleaved scans containing U component of the current image. The JPEG decoder is able to skip certain MCUs by defining the first and last MCU index. If an image is expected to show in a whole, program this register to 0. Not affected by global reset and jpeg decoder abort.

JPEG+0064h JPEG Decoder Control Register COMP1_LAST_MCU_INDEX

Bit	31	30	29	28	27	26	25	24	23	22	21	20	19	18	17	16
Name													COMP1_LAST_MCU_INDEX[19:16]			
Type													R/W			
Bit	15	14	13	12	11	10	9	8	7	6	5	4	3	2	1	0
Name	COMP1_LAST_MCU_INDEX[15:0]															
Type	R/W															

Only effective in progressive images. This control register specifies the last MCU index that hardware will process in the non-interleaved scans containing U component of the current image. The JPEG decoder is able to skip certain MCUs by defining the first and last MCU index. If an image is expected to show in a whole, be sure this register value is more than the total MCU number.(make it 0xfffff if possible in this case). Not affected by global reset and jpeg decoder abort.

JPEG+0068h JPEG Decoder Control Register COMP2_FIRST_MCU_INDEX

Bit	31	30	29	28	27	26	25	24	23	22	21	20	19	18	17	16
Name													COMP2_FIRST_MCU_INDEX[19:16]			
Type													R/W			
Bit	15	14	13	12	11	10	9	8	7	6	5	4	3	2	1	0
Name	COMP2_FIRST_MCU_INDEX[15:0]															
Type	R/W															

Only effective in progressive images. This control register specifies the first MCU index that hardware will process in the non-interleaved scans containing V component of the current image. The JPEG decoder is able to skip certain MCUs by defining the first and last MCU index. If an image is expected to show in a whole, program this register to 0. Not affected by global reset and jpeg decoder abort.

JPEG+006Ch JPEG Decoder Control Register COMP2_LAST_MCU_INDEX

Bit	31	30	29	28	27	26	25	24	23	22	21	20	19	18	17	16
Name													COMP2_LAST_MCU_INDEX[19:16]			
Type													R/W			
Bit	15	14	13	12	11	10	9	8	7	6	5	4	3	2	1	0
Name	COMP2_LAST_MCU_INDEX[15:0]															
Type	R/W															

Only effective in progressive images. This control register specifies the last MCU index that hardware will process in the non-interleaved scans containing V component of the current image. The JPEG decoder is able to skip certain MCUs by defining the first and last MCU index. If an image is expected to show in a whole, be sure this register value is more than the total MCU number.(make it 0xfffff if possible in this case). Not affected by global reset and jpeg decoder abort.

JPEG+0070h JPEG Decoder Control Register QT_ID

Bit	31	30	29	28	27	26	25	24	23	22	21	20	19	18	17	16
Name																
Type																
Bit	15	14	13	12	11	10	9	8	7	6	5	4	3	2	1	0
Name					COMP0_QT_ID[3:0]				COMP1_QT_ID[3:0]				COMP2_QT_ID[3:0]			
Type					R/W				R/W				R/W			

This register contains the quantization table IDs for YUV components. Not affected by global reset and jpeg decoder abort.

COMP0_QT_ID Quantization table ID of Y component directly extracted from SOF marker
COMP1_QT_ID Quantization table ID of U component directly extracted from SOF marker
COMP2_QT_ID Quantization table ID of V component directly extracted from SOF marker

JPEG+0074h JPEG Decoder Control Register JPEG_DEC_INTERRUPT_STATUS

Bit	31	30	29	28	27	26	25	24	23	22	21	20	19	18	17	16
Name																
Type																
Bit	15	14	13	12	11	10	9	8	7	6	5	4	3	2	1	0
Name														INT2	INT1	INT0
Type														R	R	R

The register reflects the interrupt status

INT2 Set to 1 by file overflow interrupt

INT1 Set to 1 by breakpoint interrupt

INT0 Set to 1 by end of file interrupt

JPEG+0078h JPEG Decoder Control Register JPEG_DEC_STATUS

Bit	31	30	29	28	27	26	25	24	23	22	21	20	19	18	17	16
Name		FOS	BRPS	EOFS		JPEG_DEC_STATE			HUFF_DEC_STATE				MARKER_PARSER_STATE			
Type		R	R	R		R			R				R			
Bit	15	14	13	12	11	10	9	8	7	6	5	4	3	2	1	0
Name	SOS_PARSER_STATE					DHT_PARSER_STATE				DQT_PARSER_STATE			DATA_UNIT_STATE			
Type	R					R				R			R			

6.3 Image Resizer

6.3.1 General Description

The block provides capability for image resizing as well as color space conversion from YUV to RGB space. It receives image data from an image source such as JPEG decoder in format of YUV color space, first makes image resizing, and then translates image data into RGB color space. The illustrative diagram is shown in **Figure 39**. The capability of resizing in the block is divided into two portions, coarse pass and fine pass. The first pass is coarse resizing pass and it could be able to have image shrink as 1, 1/4, 1/16, or 1/64 large as original size. The second pass is fine resizing pass and it could be able to have image shrink and enlarge in fractional ratio. Through combination of the two passes, an image can scale up or down in any ratio under some constraints. The constraint for coarse shrinking is that the size of image after coarse shrinking has the limit of maximum value 640x480. The assumption should be guaranteed by MMI. Thus maximum of the size of source image is 5120x3840. Furthermore, the size of final target image also has the limit of maximum value 640x480.

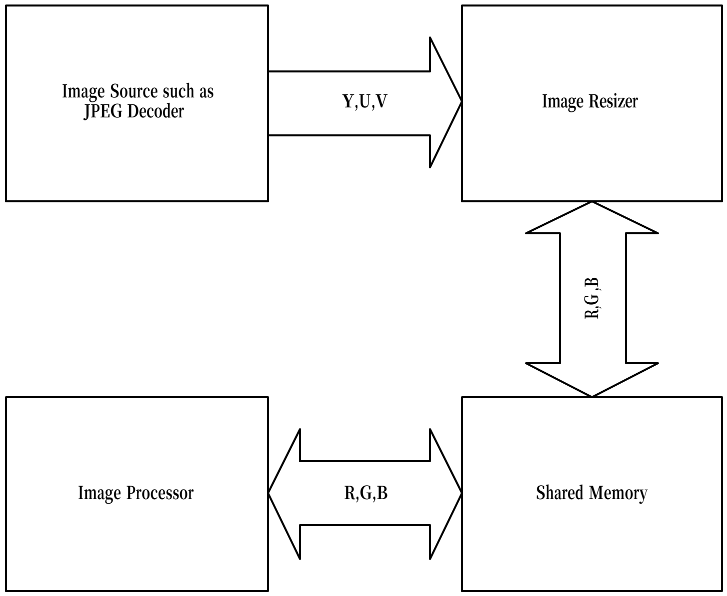

Figure 39 Overview of Image Resizer

The block diagram is shown in **Figure 40**. Here the block "CS" is block based CS (Coarse Shrinking). Block based CS is dedicated for JPEG decoder and it's 8x8 block-based process. Other blocks are scan-line based process. The major application is CS, then HR, VR, and then YUV2RGB. The possible applications include CS only, HR+VR only, and HR+VR+YUV2RGB. The red dot lines in **Figure 40** indicate hardware handshaking between two blocks. Note that processes in all blocks are in YUV color domain. If scale down by 1, 1/4, 1/16 or 1/64 is desired and RGB color domain is desired, then CS+HR+VR+YUV2RGB must all be enabled. The base address of Image Resizer is 0x8061_0000.

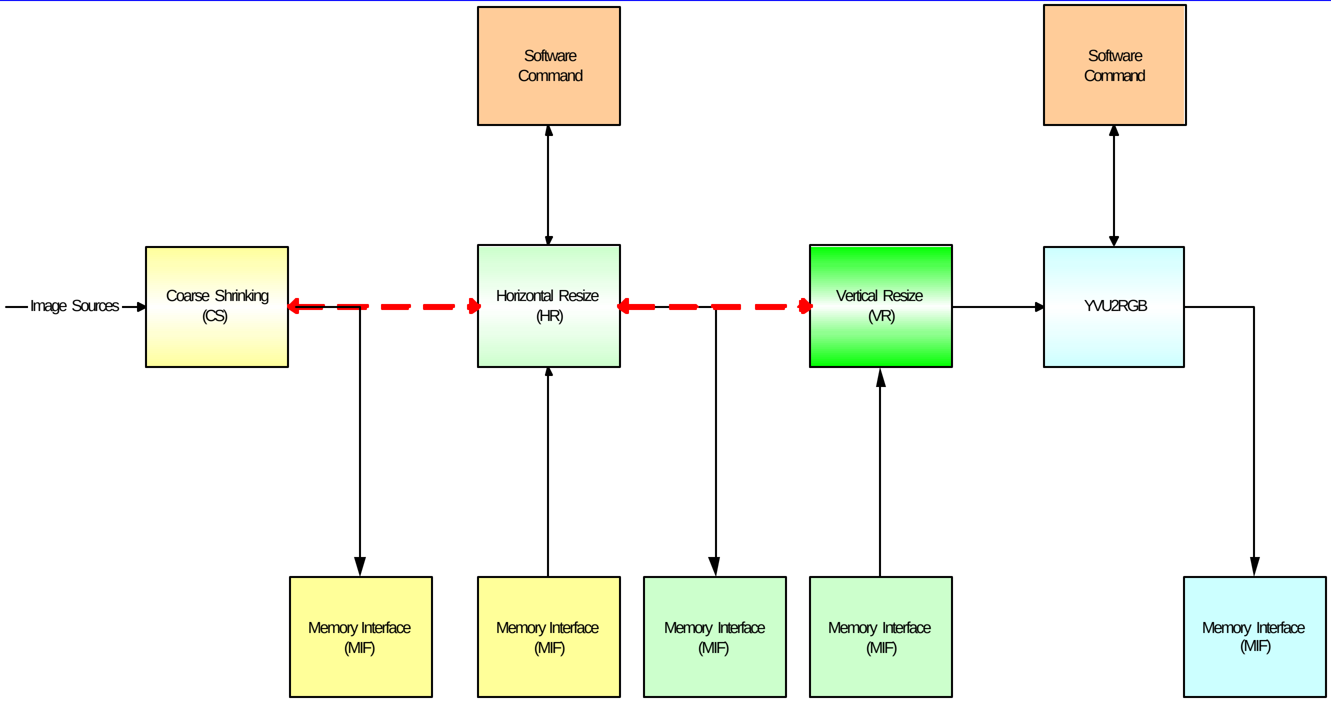

Figure 40 Block Diagram of Image Resizer

6.3.2 Requirements

There are three memory blocks needed in the block. One is line buffer, one is working memory and another is target memory. Line buffer is used to store color components from image sources after coarse scaling. Working memory is for fine scaling. Target memory is for color space conversion from YUV to RGB color space. Usually target memory is frame buffer of display. **There is one limitation on all memory base addresses. That is, base address plus pixel total cannot execede mega-byte boundary. It is because address generation for memory access only use 20-bit bitwidth.**

6.3.2.1 Memory Requirements

Let's denote sampling factor for Y-component as (H_Y, V_Y), U-component as (H_U, V_U) and V-component as (H_V, V_V). H_{max}=max(H_Y, H_U, H_V). V_{max}=max(V_Y, V_U, V_V). Then the memory requirement for line buffer is (the width of target image size)*(V_Y *8+ $\mathbf{V_U}$*8+ V_V*8) bytes. For the case of which image source is JPEG decoder, it is 50KB as (H_Y, H_U, H_V)=(1,1,1), (V_Y, V_U, V_V)=(4,4,2) and the width of target image is 640. If dual line buffer is desired, it becomes 100KB. The memory requirement for working memory is (the width of target image size)* 2*3 bytes. The memory requirement for target memory is (the width of target image size)* (the height of target image size)*2 (RGB=5,6,5 bits). **Note that if image is scaled up then line buffer size must be at least (8*Vc+1); c=Y/U/V. One more line is needed.**

6.3.2.2 Image Requirements

The image data from image sources are inputted in unit of color component such as Y- or U- or V-components. Every color component is composed of 8x8 pixels with 8-bit color depth per pixel. Therefore the width of an image source must be multiples of 8x(maximum horizontal sampling factor). Similarly the height of an image source also must be multiples of 8x(maximum vertical sampling factor). The maximum size of target image after coarse shrinking is 640x480. Furthermore, output image after resizing is encoded in RGB color space.

6.3.3 Coarse Shrinking

Coarse resizing could be able to have image shrink as 1, 1/4, 1/16, or 1/64 large as original size. It's dedicated for JPEG decoder. Therefore all processes are based on blocks composed of 8x8 pixels. There are flow control between coarse shrinking and JPEG decoder. When line buffer is not enough for coarse shrinking, coarse shrinking will halt image data input from JPEG decoder until line buffer is enough. If an image has sampling factor (H_Y=H_U=H_V) (V_Y=V_U=V_V) and image size is desired to scale down by 1, or 4, or 16 or 64 and YUV format is desired, have line buffer big enough to fill in whole image data after coarse shrinking. It's another application.

6.3.4 Fine Resizing

Fine resizing is composed of horizontal resizing and vertical resizing. It has fractional resizing capability. The image input to fine resizing has size limit of maximum 640x480, so does the output of fine resizing. For the sake of cost and speed, the algorithm used in fine resizing is bilinear algorithm. In horizontal resizing working memory for each color component that is enough to fill in two scan-lines is needed. Of course dual buffer or more can be used.

6.3.5 YUV2RGB

The sources of YUV2RGB are image data on the fly after vertical resizing. RGB is in format of 5-6-5.

6.3.6 Register Definitions

REGISTER ADDRESS	REGISTER NAME	SYNONYM
RESZ+ 0000h	Image Resizer Control Register	RESZ_CON
RESZ + 0004h	Image Resizer Status Register	RESZ_STA
RESZ + 0008h	Image Resizer Source Image Size Register	RESZ_SRCSZ
RESZ + 000Ch	Image Resizer Target Image Size Register	RESZ_TARSZ
RESZ + 0010h	Image Resizer Block Coarse Shrinking Configuration Register	RESZ_BLKCSCFG
RESZ + 0014h	Image Resizer Y-Component Line Buffer Memory Base Address	RESZ_ YLMBASE
RESZ + 0018h	Image Resizer U-Component Line Buffer Memory Base Address	RESZ_ULMBASE
RESZ + 001Ch	Image Resizer V-Component Line Buffer Memory Base Address	RESZ_ VLMBASE
RESZ + 0020h	Image Resizer Fine Resizing Configuration Register	RESZ_FRCFG
RESZ + 0024h	Image Resizer Y-Component Working Memory Base Address	RESZ_ YWMBASE
RESZ + 0028h	Image Resizer U-Component Working Memory Base Address	RESZ_UWMBASE
RESZ + 002Ch	Image Resizer V-Component Working Memory Base Address	RESZ_ VWMBASE
RESZ + 0 030h	Image Resizer YUV2RGB Configuration Register	RESZ_ YUV2RGB
RESZ + 0034h	Image Resizer Target Memory Base Address Register	RESZ_TMBASE
RESZ + 0038h	Image Resizer Line Buffer Size Register	RESZ_LBSIZE
RESZ + 0040h	Image Resizer Interrupt Register	RESZ_INT

6.3.6.1 Image Resizer Control Register

RESZ+0000h Image Resizer Control Register RESZ_CON

Bit	31	30	29	28	27	26	25	24	23	22	21	20	19	18	17	16
Name														YUV2RGBRST	FRRST	BLKCSRST
Type														R/W	R/W	R/W
Reset														0	0	0
Bit	15	14	13	12	11	10	9	8	7	6	5	4	3	2	1	0
Name														YUV2RGBENA	FRENA	BLKCSENA
Type														R/W	R/W	R/W
Reset														0	0	0

The register is for global control of Image Resizer.

BLKCSENA Writing '1' to the register bit will cause Block Coarse Shrinking proceed to work. Block Coarse Shrinking is designed to cooperate width JPEG decoder. It works on the fly. Bu it needs to be restarted every time before working.

FRENA Writing '1' to the register bit will cause fine resizing proceed to work.

YUV2RGBENA Writing '1' to the register bit will cause YUV2RGB proceed to work.

BLKCSRST Writing '1' to the register bit will force Block Coarse Shrinking to stop immediately and have Block Coarse Shrinking keep in reset state. In order to have Block Coarse Shrinking go to normal state, writing '0' to the register bit.

FRRST Writing '1' to the register will force fine resizing to stop immediately and have fine resizing keep in reset state. In order to have fine resizing go to normal state, writing '0' to the register bit.

YUV2RGBRST Writing '1' to the register will force YUV2RGB to stop immediately and have YUV2RGB keep in reset state. In order to have YUV2RGB go to normal state, writing '0' to the register bit.

6.3.6.2 Image Resizer Status Register

RESZ+0004h Image Resizer Status Register RESZ_STA

Bit	31	30	29	28	27	26	25	24	23	22	21	20	19	18	17	16
Name																
Type																
Reset																
Bit	15	14	13	12	11	10	9	8	7	6	5	4	3	2	1	0
Name														Y2RBUSY	FRBUSY	BLKCSBUSY
Type														R	R	R
Reset														-	-	-

The register indicates global status of Image Resizer.

6.3.6.3 Image Resizer Source Image Size Register

RESZ+0008h Image Resizer Source Image Size Register RESZ_SRCSZ

Bit	31	30	29	28	27	26	25	24	23	22	21	20	19	18	17	16
Name							HS									
Type							R/W									
Bit	15	14	13	12	11	10	9	8	7	6	5	4	3	2	1	0
Name							WS									
Type							R/W									

The register specifies the size of source image after coarse shrink process. The allowable maximum size is 640x480. Note that the width of source image must be multiples of $8xH_{max}$ and the height of source image must be multiples of $8xV_{max}$ when Block Coarse Shrinking is involved. Or Image Resizer will be disabled.

WS The register field specifies the width of source image.

- **1** The width of source image is 1.
- **2** The width of source image is 2.
- …
- **640** The width of source image is 640.
- **Other value is invalid** Image Resizer will be disabled

HS The register field specifies the height of source image.

- **1** The height of source image is 1.
- **2** The height of source image is 2.
- …
- **480** The height of source image is 480.
- **Other value is invalid** Image Resizer will be disabled

6.3.6.4 Image Resizer Target Image Size Register

RESZ+000Ch Image Resizer Target Image Size Register RESZ_TARSZ

Bit	31	30	29	28	27	26	25	24	23	22	21	20	19	18	17	16
Name							HT									
Type							R/W									
Bit	15	14	13	12	11	10	9	8	7	6	5	4	3	2	1	0
Name							WT									
Type							R/W									

The register specifies the size of target image.

WT The register field specifies the width of target image.

- **1** The width of target image is 1.
- **2** The width of target image is 2.
- …
- **640** The width of target image is 640.
- **Other value is invalid** Image Resizer will be disabled

HT The register field specifies the height of target image.

- **1** The height of target image is 1.
- **2** The height of target image is 2.
- …
- **480** The height of target image after coarse shrink process is 480.
- **Other value is invalid** Image Resizer will be disabled

6.3.6.5 Image Resizer Block Coarse Shrinking Configuration Register

RESZ+0010h Image Resizer Block Coarse Shrinking Configuration Register RESZ_BLKCSCFG

Bit	31	30	29	28	27	26	25	24	23	22	21	20	19	18	17	16
Name																
Type																
Reset																
Bit	15	14	13	12	11	10	9	8	7	6	5	4	3	2	1	0
Name	VV		HV		VU		HU		VY		HY				CSF	
Type	R/W		R/W		R/W		R/W		R/W		R/W				R/W	
Reset	00		00		00		00		00		00				00	

The register is for various configuration of Block Coarse Shrinking in Image Resizer. Block Coarse Shrinking is dedicated for JPEG decoder. Therefore all processes are based on blocks composed of 8x8 pixels. **Note that all parameters must be set before writing '1' to the register bit RESZ_CON.BLKCSENA.**

CSF It stands for Coarse Shrink Factor. The value specifies the scale factor in coarse shrink pass.

- **00** Image size does not change after coarse shrink pass.
- **01** Image size becomes 1/4 of original size after coarse shrink pass.
- **10** Image size becomes 1/16 of original size after coarse shrink pass.
- **11** Image size becomes 1/64 of original size after coarse shrink pass.

HY Horizontal sampling factor for Y-component

00 Horizontal sampling factor for Y-component is 1.
01 Horizontal sampling factor for Y-component is 2.
10 Horizontal sampling factor for Y-component is 4.
11 Reserved.

VY Vertical sampling factor for Y-component
00 Vertical sampling factor for Y-component is 1.
01 Vertical sampling factor for Y-component is 2.
10 Vertical sampling factor for Y-component is 4.
11 Reserved.

HU Horizontal sampling factor for U-component
00 Horizontal sampling factor for U-component is 1.
01 Horizontal sampling factor for U-component is 2.
10 Horizontal sampling factor for U-component is 4.
11 Reserved.

VU Vertical sampling factor for U-component
00 Vertical sampling factor for U-component is 1.
01 Vertical sampling factor for U-component is 2.
10 Vertical sampling factor for U-component is 4.
11 Reserved.

HV Horizontal sampling factor for V-component
00 Horizontal sampling factor for V-component is 1.
01 Horizontal sampling factor for V-component is 2.
10 Horizontal sampling factor for V-component is 4.
11 Reserved.

VV Vertical sampling factor for V-component
00 Vertical sampling factor for V-component is 1.
01 Vertical sampling factor for V-component is 2.
10 Vertical sampling factor for V-component is 4.
11 Reserved.

6.3.6.6 Image Resizer Y-Component Line Buffer Memory Base Address Register

RESZ+0014h **Image Resizer Y-Component Line Buffer Memory Base Address Register** **RESZ_YLMBASE**

Bit	31	30	29	28	27	26	25	24	23	22	21	20	19	18	17	16
Name	YLMBASE [31:16]															
Type	R/W															
Bit	15	14	13	12	11	10	9	8	7	6	5	4	3	2	1	0
Name	YLMBASE [15:0]															
Type	R/W															

The register specifies the base address of line buffer for Y-component. It could be byte-aligned.

6.3.6.7 Image Resizer U-Component Line Buffer Memory Base Address Register

RESZ+0018h Image Resizer U-Component Line Buffer Memory Base Address Register RESZ_ULMBASE

Bit	31	30	29	28	27	26	25	24	23	22	21	20	19	18	17	16
Name	ULMBASE [31:16]															
Type	R/W															
Bit	15	14	13	12	11	10	9	8	7	6	5	4	3	2	1	0
Name	ULMBASE [15:0]															
Type	R/W															

The register specifies the base address of line buffer for U-component. It could be byte -aligned.

6.3.6.8 Image Resizer V-Component Line Buffer Memory Base Address Register

RESZ+001Ch Image Resizer V-Component Line Buffer Memory Base Address Register RESZ_VLMBASE

Bit	31	30	29	28	27	26	25	24	23	22	21	20	19	18	17	16
Name	VLMBASE [31:16]															
Type	R/W															
Bit	15	14	13	12	11	10	9	8	7	6	5	4	3	2	1	0
Name	VLMBASE [15:0]															
Type	R/W															

The register specifies the base address of line buffer for V-component. It could be byte -aligned.

6.3.6.9 Image Resizer Fine Resizing Configuration Register

RESZ+0020h Image Resizer Fine Resizing Configuration Register RESZ_FRCFG

Bit	31	30	29	28	27	26	25	24	23	22	21	20	19	18	17	16
Name							WMSZ									
Type							R/W									
Reset							-									
Bit	15	14	13	12	11	10	9	8	7	6	5	4	3	2	1	0
Name	SEQ												HRSRC			
Type	R/W												R/W			
Reset	0												00			

The register specifies various setting of control for fine resizing, including of horizontal and vertical resizing. **Note that all parameters must be set before writing '1' to the register bit RESZ_CON.FRENA**.

HRSRC The register field specifies the source of horizontal resizing.

- **00** The source of horizontal resizing is Block Coarse Shrinking.
- **Others** Reserved.

SEQ The register bit is used to force horizontal resizing and vertical resizing to execute sequentially. When the bit is set to '1', even though dual buffer for working memory is used horizontal resizing will not process next image data until horizontal resizing finishes current image data.

- **0** horizontal resizing and vertical resizing can execute parallel.
- **1** horizontal resizing and vertical resizing will execute sequentially.

WMSZ It stands for Working Memory SiZe. The register field specifies how many lines can be filled into working memory for each color component. If dual line buffer is used, horizontal resizing and vertical resizing can execute parallel if the register bit SEQ is not set. **It must be even.**

2 Working memory for each color component is 2 line.
4 Working memory for each color component is 4 lines.
6 Working memory for each color component is 6 lines.
...
480 Working memory for each color component is 480 lines.
Other vlaules invalid

6.3.6.10 Image Resizer Y-Component Working Memory Base Address Register

RESZ+0024h **Image Resizer Y-Component Working Memory Base Address Register** **RESZ_YWMBASE**

Bit	31	30	29	28	27	26	25	24	23	22	21	20	19	18	17	16
Name	YWMBASE [31:16]															
Type	R/W															
Bit	15	14	13	12	11	10	9	8	7	6	5	4	3	2	1	0
Name	YWMBASE [15:0]															
Type	R/W															

The register specifies the base address of working memory for Y-component. It could be bye-aligned.

6.3.6.11 Image Resizer U-Component Working Memory Base Address Register

RESZ+0028h **Image Resizer U-Component Working Memory Base Address Register** **RESZ_UWMBASE**

Bit	31	30	29	28	27	26	25	24	23	22	21	20	19	18	17	16
Name	UWMBASE [31:16]															
Type	R/W															
Bit	15	14	13	12	11	10	9	8	7	6	5	4	3	2	1	0
Name	UWMBASE [15:0]															
Type	R/W															

The register specifies the base address of working memory for U-component. It could be bye-aligned.

6.3.6.12 Image Resizer V-Component Working Memory Base Address Register

RESZ+002Ch **Image Resizer V-Component Working Memory Base Address Register** **RESZ_VWMBASE**

Bit	31	30	29	28	27	26	25	24	23	22	21	20	19	18	17	16
Name	VWMBASE [31:16]															
Type	R/W															
Bit	15	14	13	12	11	10	9	8	7	6	5	4	3	2	1	0
Name	VWMBASE [15:0]															
Type	R/W															

The register specifies the base address of working memory for V-component. It could be bye-aligned.

MediaTek Inc. Confidential

6.3.6.13 Image Resizer YUV2RGB Configuration Register

RESZ+0030h Image Resizer YUV2RGB Configuration Register RESZ_YUV2RGB

Bit	31	30	29	28	27	26	25	24	23	22	21	20	19	18	17	16
Name																
Type																
Reset																
Bit	**15**	**14**	**13**	**12**	**11**	**10**	**9**	**8**	**7**	**6**	**5**	**4**	**3**	**2**	**1**	**0**
Name	INTEN														SRC	
Type	R/W														R/W	
Reset	0														00	

The register specifies various setting of control for YUV2RGB. **Note that ALL parameters must be set before writing '1' to the register bit RESZ_CONN.YUV2RGBENA**.

SRC The register field specifies the source of YUV2RGB. It could be YUV2RGB or pixe l processing or some memory space.

00 The source of YUV2RGB is vertical resizing.

Others Reserved

INTEN Interrupt Enable. When interrupt for YUV2RGB is enabled, interrupt will arise whenever YUV2RGB finishes.

0 Interrupt for YUV2RGB is disabled.

1 Interrupt for YUV2RGB is enabled.

6.3.6.14 Image Resizer Target Memory Base Address Register

RESZ+0034h Image Resizer Target Memory Base Address Register RESZ_TMBASE

Bit	31	30	29	28	27	26	25	24	23	22	21	20	19	18	17	16
Name	TMBASE [31:16]															
Type	R/W															
Bit	**15**	**14**	**13**	**12**	**11**	**10**	**9**	**8**	**7**	**6**	**5**	**4**	**3**	**2**	**1**	**0**
Name	TMBASE [15:1]															
Type	R/W															

The register specifies the base address of target memory. It' must be hald-word (2 bytes) aligned.

6.3.6.15 Image Resizer Line Buffer Size Register

RESZ+0038h Image Resizer Line Buffer Size Register RESZ_LBSIZE

Bit	31	30	29	28	27	26	25	24	23	22	21	20	19	18	17	16
Name			VLBSZ [9:0]										ULBSZ [9:6]			
Type			R/W										R/W			
Bit	**15**	**14**	**13**	**12**	**11**	**10**	**9**	**8**	**7**	**6**	**5**	**4**	**3**	**2**	**1**	**0**
Name	ULBSZ [5:0]						YLBZE [9:0]									
Type	R/W						R/W									

The register specifies line buffer size for image data after coarse shrinking. **Note that if image is scaled up then line buffer size must be at least (8*Vmax+1). One more line is needed.**

YLBSZ It stands for Y-component Line Buffer SiZe. The register field specifies how many lines of Y-component can be filled into line buffer. Line buffer size for U- and V-component can be determined according to sampling factor. For example, if (V_Y, V_U, V_V)=(4,4,2) and line buffer size for Y-component is 32 lines then line buffer size for U-component is also 32 lines and V-component 16 lines. If line buffer has capacity for whole image after block coarse shrinking, then block coarse shrinking can be used as applications of scale down by 2, or 4, or 8. If dual line buffer is used, block coarse shrinking and horizontal resizing can execute parallel.

1 Line buffer size for Y-component is 1 lines.

2 Line buffer size for Y-component is 2 lines.

3 Line buffer size for Y-component is 3 lines.

…

480 Line buffer size for Y-component is 480 lines.

Other value Other value is invalid and will have Image Resizer run into unknown state.

ULBSZ It stands for U-component Line Buffer SiZe. See the description of the register field YLBSZ.

VLBSZ It stands for V-component Line Buffer SiZe. See the description of the register field YLBSZ.

6.3.6.16 Image Resizer Interrupt Register

RESZ+0040h Image Resizer Interrupt Register RESZ_INT

Bit	31	30	29	28	27	26	25	24	23	22	21	20	19	18	17	16
Name																
Type																
Reset																
Bit	**15**	**14**	**13**	**12**	**11**	**10**	**9**	**8**	**7**	**6**	**5**	**4**	**3**	**2**	**1**	**0**
Name																Y2RINT
Type																RC
Reset																0

The register shows up the interrupt status of resizer.

Y2RINT Interrupt for YUV2RGB. No matter the register bit RESZ_YUV2RGB.INTEN is enabled or not, the register bit will be active whenever interrupt for completeness of YUV2RGB translation of an image is active. It could be as software interrupt by polling the register bit. Clear it by reading the register.

6.3.7 Application Notes

- When Coarse Shrinking is started by writing '1' to RESZ_CSCON.ENA, some setting will be check before Coarse Shrinking proceed to work. If checking fails, Coarse Shrinking will not work. These checking includes:

1. 0 < RESZ_SRCSZ.WS < = 640
2. 0 < RESZ_SRCSZ.HS < = 480
3. RESZ_SRCSZ.WS % 8 ==0
4. RESZ_SRCSZ.HS % 8 ==0

- Determine line buffer size by taking into consideration of CSF and sampling factor. For example, if CSF=3 and (Vy, Vu, Vv)=(4,x,x) then minimum of line buffer could be 4 instead of 32.

- There is one limitation on all memory base addresses. That is, base address plus pixel total cannot execede mega-byte boundary. It is because address generation for memory access only use 20-bit bitwidth.
- Note that if image is scaled up then line buffer size must be at least (8*Vc+1); c=Y/U/V. One more line is needed.
- **Donot assign too many line buffers for one color component than others. For example, (Vy,Vu,Vv)=(1,1,1) and line buffers for (y,u,v)=(16,8,8). Line buffers for each color component only need 8 lines in this case. However, line buffers for Y-component is 16 which is more than other color components much in this case.**

6.4 NAND FLASH Interface

6.4.1 General Description

MT6218B provides 8-bit NAND flash interface.

The NAND FLASH interface support features as follows:

- ECC (Hamming code) acceleration capable of one-bit error correction and two bits error detection.
- Programmable ECC block size. Support 2 or 4 ECC block within a page.
- Command compatible with products from different major vendors including AMD, SAMSUNG, and TOSHIBA.
- Device address space ranges up to 4Gbits.
- Only 8 bits bus width is supported.
- Word/byte access through APB bus.
- Direct Memory Access for massive data transfer.
- Latch sensitive interrupt to indicate ready state for read, program, erase operation and error report.
- Programmable wait states, command/address setup and hold time, read enable hold time, and write enable recovery time.
- Programmable page size including 2 bytes.
- No support to read data without spare area data.

The NFI core can automatically generate ECC parity bits when programming or reading the device. If the user approves the way it stores the parity bits in the spare area for each page, the AUTOECC mode can be used. Otherwise, the user can prepare the data (may contains operating system information or ECC parity bits) for the spare area with another arrangement. In the former case, the core can check the parity bits when reading from the device. The ECC module features the hamming code, which is capable of correcting one bit error and detecting two bits error within one ECC block.

6.4.2 Register definition

NFI+0000h NAND flash access control register NFI_ACCCON

Bit	15	14	13	12	11	10	9	8	7	6	5	4	3	2	1	0
Name						C2R			W2R		WH		WST		RLT	
Type						R/W			R/W		R/W		R/W		R/W	
Reset						0			0		0		0		0	

This is the timing access control register for the NAND FLASH interface. In order to accommodate operations for different system clock frequency ranges from 13MHz to 52MHz, wait states and setup/hold time margin can be configured in this register.

C2R The field signifies the minimum required time from NCEB low to NREB low.

W2R The field signifies the minimum required time from NWEB high to NREB low. It's in unit of 2T. So the actual time ranges from 2T to 8T in step of 2T.

WH Write-enable hold-time.

The field specifies the hold time of NALE, NCLE, NCEB signals relative to the rising edge of NWEB. This field is associated with **WST** to expand the write cycle time, and is associated with **RLT** to expand the read cycle time.

RLT Read Latency Time

The field specifies how many wait states to be inserted to meet the requirement of the read access time for the device.

- **00** No wait state.
- **01** 1T wait state.
- **10** 2T wait state.
- **11** 3T wait state.

WST Write Wait State

The field specifies the wait states to be inserted to meet the requirement of the pulse width of the NWEB signal.

- **00** No wait state.
- **01** 1T wait state.
- **10** 2T wait state.
- **11** 3T wait state.

NFI +0004h NFI page format control register NFI_PAGEFMT

Bit	15	14	13	12	11	10	9	8	7	6	5	4	3	2	1	0
Name										ECCBLKSIZE				ADRMODE	PSIZE	
Type										R/W				R/W	R/W	
Reset										0				0	0	

This register manages the page format of the device. It includes the page size, the associated address format, and the ECC block size.

ECCBLKSIZE ECC block size.

This field signifies the size of one ECC block. The hardware-fuelled ECC generation provides 2 or 4 blocks within a single page.

- **0** ECC block size: 128 bytes. Used for devices with page size equal to 512 bytes.
- **1** ECC block size: 256 bytes. Used for devices with page size equal to 512 bytes.
- **2** ECC block size: 512 bytes. Used for devices with page size equal to 2048 bytes.
- **3** ECC block size: 1048 bytes. Used for devices with page size equal to 2048 bytes.
- **4~** Reserved.

ADRMODE Address mode. This field specifies the input address format.

- **0** Normal input address mode, in which the half page identifier is not specified in the address assignment but in the command set. As in **Table 27**, A7 to A0 identifies the byte address within half a page, A12 to A9 specifies the page address within a block, and other bits specify the block address. The mode is used mostly for the device with 512 bytes page size.

1 Large size input address mode, in which all address information is specified in the address assignment rather than in the command set. As in **Table 7**, A11 to A0 identifies the byte address within a page (column address). The mode is used for the device with 2048 bytes page size.

	NLD7	NLD6	NLD5	NLD4	NLD3	NLD2	NLD1	NLD0
First cycle	A7	A6	A5	A4	A3	A2	A1	A0
Second cycle	A16	A15	A14	A13	A12	A11	A10	A9

Table 27 Address assignment of the first type (ADRMODE = 0, cycles after second one are omitted)

	NLD7	NLD6	NLD5	NLD4	NLD3	NLD2	NLD1	NLD0
First cycle	A7	A6	A5	A4	A3	A2	A1	A0
Second cycle	0	0	0	0	0	0	A9	A8

Table 28 Address assignment of the second type (ADRMODE = 1, cycles after second one are omitted)

PSIZE Page Size.

The field specifies the size of one page for the device. Two most widely used page size are supported.

0 The page size is 528 bytes (including 512 bytes data area and 16 bytes spare area).

1 The page size is 2112 bytes (including 2048 bytes data area and 64 bytes spare area).

2~ Reserved.

NFI +0008h Operation control register NFI_OPCON

Bit	15	14	13	12	11	10	9	8	7	6	5	4	3	2	1	0
Name			NOB					SRD			EWR	ERD			BWR	BRD
Type			W/R					WO			WO	WO			R/W	R/W
Reset			0					0			0	0			0	0

This register controls the burst mode and the single of the data access. In burst mode, the core supposes there are one or more than one page of data to be accessed. On the contrary, in single mode, the core supposes there are only less than 4 bytes of data to be accessed.

BRD *Burst read mode.* Setting this field to be logic-1 enables the data read operation. The NFI core will issue read cycles to retrieve data from the device when the data FIFO is not full or the device is not in the busy state. The NFI core supports consecutive page reading. A page address counter is built in. If the reading reaches to the end of the page, the device will enter the busy state to prepare data of the next page, and the NFI core will automatically pause reading and remain inactive until the device returns to the ready state. The page address counter will restart to count from 0 after the device returns to the ready state and start retrieving data again.

BWR *Burst write mode.* Setting to be logic-1 enables the data burst write operation for DMA operation. Actually the NFI core will issue write cycles once if the data FIFO is not empty even without setting this flag. But if DMA is to be utilized, the bit should be enabled. If DMA is not to be utilized, the bit didn't have to be enabled.

ERD *ECC read mode.* Setting to be logic-1 initializes the ECC checking and correcting for the current page. The ECC checking is only valid when a full ECC block has been read.

EWR Setting to be logic-1 initializes the ECC parity generation for the current page. The ECC code generation is only valid when a full ECC block has been programmed.

SRD Setting to be logic-1 initializes the one-shot data read operation. It's mainly used for read ID and read status command, which requires no more than 4 read cycles to retrieve data from the device.

NOB The field signifies the number of bytes to be retrieved from the device in single mode, and the number of bytes per AHB transaction in both single and burst mode.

0 Read 4 bytes from the device.

1 Read 1 byte from the device.

2 Read 2 bytes from the device.

3 Read 3 bytes from the device.

NFI +000Ch Command register NFI_CMD

Bit	15	14	13	12	11	10	9	8	7	6	5	4	3	2	1	0
Name									CMD							
Type									R/W							
Reset									45							

This is the command input register. The user should write this register to issue a command. Please refer to device datasheet for the command set. The core can issue some associated commands automatically. Please check out register **NFI_CON** for those commands.

CMD Command word.

NFI +0010h Address length register NFI_ADDNOB

Bit	15	14	13	12	11	10	9	8	7	6	5	4	3	2	1	0
Name														ADDR_NOB		
Type														R/W		
Reset														0		

This register signifies the number of bytes corresponding to current command. The valid number of bytes ranges from 1 to 5. The address format depends on what device to be used and what commands to be applied. The NFI core is made transparent to those different situations except that the user has to define the number of bytes.
The user should write the target address to the address register **NFI_ADDRL** before programming this register.

ADDR_NOB Number of bytes for the address

NFI +0014h Least significant address register NFI_ADDRL

Bit	31	30	29	28	27	26	25	24	23	22	21	20	19	18	17	16
Name	ADDR3								ADDR2							
Type	R/W								R/W							
Reset	0								0							
Bit	15	14	13	12	11	10	9	8	7	6	5	4	3	2	1	0
Name	ADDR1								ADDR0							
Type	R/W								R/W							
Reset	0								0							

This defines the least significant 4 bytes of the address field to be applied to the device. Since the device bus width is 1 byte, the NFI core arranges the order of address data to be least significant byte first. The user should put the first address byte in the field **ADDR0**, the second byte in the field **ADDR1**, and so on.

ADDR3 The fourth address byte.

ADDR2 The third address byte.

ADDR1 The second address byte.

ADDR0 The first address byte.

NFI +0018h Most significant address register NFI_ADDRM

Bit	15	14	13	12	11	10	9	8	7	6	5	4	3	2	1	0
Name									ADDR4							
Type									R/W							
Reset									0							

This register defines the most significant byte of the address field to be applied to the device. The NFI core supports address size up to 5 bytes. Programming this register implicitly indicates that the number of address field is 5. In this case, the NFI core will automatically set the **ADDR_NOB** to 5.

ADDR4 The fifth address byte.

NFI +001Ch Write data buffer NFI_DATAW

Bit	31	30	29	28	27	26	25	24	23	22	21	20	19	18	17	16
Name	DW3								DW2							
Type	R/W								R/W							
Reset	0								0							
Bit	15	14	13	12	11	10	9	8	7	6	5	4	3	2	1	0
Name	DW1								DW0							
Type	R/W								R/W							
Reset	0								0							

This is the write port of the data FIFO. It supports word access. The least significant byte **DW0** is to be programmed to the device first, then **DW1**, and so on.

If the data to be programmed is not word aligned, byte write access will be needed. Instead, the user should use another register **NFI_DATAWB** for byte programming. Writing a word to **NFI_DATAW** is equivalent to writing four bytes **DW0**, **DW1**, **DW2**, **DW3** in order to **NFI_DATAWB**. Be reminded that the word alignment is from the perspective of the user. The device bus is byte-wide. According to the flash's nature, the page address will wrap around once it reaches the end of the page.

DW3 Write data byte 3.

DW2 Write data byte 2.

DW1 Write data byte 1.

DW0 Write data byte 0.

NFI +0020h Write data buffer for byte access NFI_DATAWB

Bit	15	14	13	12	11	10	9	8	7	6	5	4	3	2	1	0
Name									DW0							
Type									R/W							
Reset									0							

This is the write port for the data FIFO for byte access.

DW0 Write data byte.

NFI +0024h Read data buffer NFI_DATAR

Bit	31	30	29	28	27	26	25	24	23	22	21	20	19	18	17	16
Name	DR3								DR2							
Type	R/W								R/W							
Reset	0								0							
Bit	15	14	13	12	11	10	9	8	7	6	5	4	3	2	1	0

Name	DR1	DR0
Type	R/W	R/W
Reset	0	0

This is the read port of the data FIFO. It supports word access. The least significant byte **DR0** is the first byte read from the device, then **DR1**, and so on.

DR3 Read data byte 3.
DR2 Read data byte 2.
DR1 Read data byte 1.
DR0 Read data byte 0.

NFI +002Ch NFI status NFI_PSTA

Bit	15	14	13	12	11	10	9	8	7	6	5	4	3	2	1	0
Name													DATAW	DATAR	ADDR	CMD
Type													R/W	R/W	R/W	R/W
Reset													0	0	0	0

This register signifies the NFI core control status including command mode, address mode, data program and read mode. The user should poll this register for the end of those operations.

DATAW The NFI core is in data write mode.
DATAR The NFI core is in data read mode.
ADDR The NFI core is in address mode.
CMD The NFI core is in command mode.

NFI +0030h FIFO control NFI_FIFOCON

Bit	15	14	13	12	11	10	9	8	7	6	5	4	3	2	1	0
Name							RESET	FLUSH					WR_FULL	WR_EMPTY	RD_FULL	RD_EMPTY
Type							WO	WO					RO	RO	RO	RO
Reset							0	0					0	1	0	1

The register signifies the status of the data FIFO.

RESET Reset the stats machine and data FIFO.
FLUSH Flush the data FIFO.
WR_FULL Data FIFO full in burst write mode.
WR_EMPTY Data FIFO empty in burst write mode.
RD_FULL Data FIFO full in burst read mode.
RD_EMPTY Data FIFO empty in burst read mode.

NFI +0034h NFI control NFI_CON

Bit	15	14	13	12	11	10	9	8	7	6	5	4	3	2	1	0
Name					MULTIPAGE_CON	READ_CON	PROGRAM_CON	ERASE_CON			SW_PROGSPARE_EN	MULTI_PAGE_RD_EN	AUTOECC_ENC_EN	AUTOECC_DEC_EN	DMA_WR_EN	DMA_RD_EN
Type					R/W	R/W	R/W	R/W			R/W	R/W	R/W	R/W	R/W	R/W
Reset					0	0	0	0			0	0	0	0	0	0

The register controls the DMA and ECC functions. For all field, Setting to be logic-1 signifies enabled, while 0 signifies disabled.

MULTIPAGE_CON This bit signifies that the first-cycle command for read operation (00h) can be automatically performed to read the next page automatically. Automatic ECC decoding flag **AUTOECC_DEC_EN** should also be enabled for multiple page access.

READ_CON This bit signifies that the second-cycle command for read operation (30h) can be automatically performed. This conforms to the command set for the device with more then 1Gb capacity.

PROGRAM_CON This bit signifies that the second-cycle command for page program operation (10h) can be automatically performed after the data for the entire page (including the spare area) has been written. It should be associated with automatic ECC encoding mode enabled.

ERASE_CON The bit signifies that the second-cycle command for block erase operation (D0h) can be automatically performed after the block address is latched.

SW_PROGSPARE_EN If enabled, the NFI core allows the user to program or read the spare area. Otherwise, the spare area can be programmed or read by the core.

MULTI_PAGE_RD_EN Multiple page burst read enable. If enabled, the burst read operation could continue through multiple pages within a block. It's also possible and more efficient to associate with DMA scheme to read a sector of data contained within the same block.

AUTOECC_ENC_EN Automatic ECC encoding enable. If enabled, the ECC parity is written automatically to the spare area right after the end of the data area. If **SW_PROGSPARE_EN** is set, however, the mode can't be enabled since the core can't access the spare area.

AUTOECC_DEC_EN Automatic ECC decoding enabled, the error checking and correcting are performed automatically on the data read from the memory and vice versa. If enabled, when the page address reaches the end of the data read of one page, additional read cycles will be issued to retrieve the ECC parity-check bits from the spare area to perform checking and correcting.

DMA_WR_EN This field is used to control the activity of DMA write transfer.

DMA_RD_EN This field is used to control the activity of DMA read transfer.

NFI +0038h Interrupt status register NFI_INTR

Bit	15	14	13	12	11	10	9	8	7	6	5	4	3	2	1	0
Name				BUSY_RETURN	ERR_COR3	ERR_COR2	ERR_COR1	ERR_COR0	ERR_DET3	ERR_DET2	ERR_DET1	ERR_DET0	ERASE_COMPLETE	RESET_COMPLETE	WR_COMPLETE	RD_COMPLETE
Type				RC	RC	RC	RC	RC	RC	RC	RC	RC	RC	RC	RC	RC
Reset				0	0	0	0	0	0	0	0	0	0	0	0	0

The register indicates the status of all the interrupt sources. Read this register will clear all interrupts.

BUSY_RETURN Indicates that the device state returns from busy by inspecting the R/B# pin.

ERR_COR3 Indicates that the single bit error in ECC block 3 needs to be corrected.

ERR_COR2 Indicates that the single bit error in ECC block 2 needs to be corrected.

ERR_COR1 Indicates that the single bit error in ECC block 1 needs to be corrected.

ERR_COR0 Indicates that the single bit error in ECC block 0 needs to be corrected.

ERR_DET3 Indicates an uncorrectable error in ECC block 3.

ERR_DET2 Indicates an uncorrectable error in ECC block 2.

ERR_DET1 Indicates an uncorrectable error in ECC block 1.

MediaTek Inc. Confidential

ERR_DET0 Indicates an uncorrectable error in ECC block 0.

ERASE_COMPLETE Indicates that the erase operation is completed.

RESET_COMPLETE Indicates that the reset operation is completed.

WR_COMPLETE Indicates that the write operation is completed.

RD_COMPLETE Indicates that the single page read operation is completed.

NFI +003Ch Interrupt enable register NFI_INTR_EN

Bit	15	14	13	12	11	10	9	8	7	6	5	4	3	2	1	0
Name										BUSY_RETURN_EN	ERR_COR_EN	ERR_DET_EN	ERASE_COMPLETE_EN	RESET_COMPLETE_EN	WR_COMPLETE_EN	RD_COMPLETE_EN
Type										R/W	R/W	R/W	R/W	R/W	R/W	R/W
Reset										0	0	0	0	0	0	0

This register controls the activity for the interrupt sources.

BUSY_RETURN_EN The busy return interrupt enable.

ERR_COR_EN The error correction interrupt enable.

ERR_DET_EN The error detection interrupt enable

ERASE_COMPLETE_EN The erase completion interrupt enable.

RESET_COMPLETE_EN The reset completion interrupt enable.

WR_COMPLETE_EN The single page write completion interrupt enable.

RD_COMPLETE_EN The single page read completion interrupt enable.

NFI +0050h ECC block 0 parity error detect syndrome address NFI_SYM0_ADDR

Bit	15	14	13	12	11	10	9	8	7	6	5	4	3	2	1	0
Name							SYM									
Type							RO									
Reset							0									

This register identifies the address within ECC block 0 that a single bit error has been detected.

SYM The byte address of the error-correctable bit.

NFI +0054h ECC block 1 parity error detect syndrome address NFI_SYM1_ADDR

Bit	15	14	13	12	11	10	9	8	7	6	5	4	3	2	1	0
Name							SYM									
Type							RO									
Reset							0									

This register identifies the address within ECC block 1 that a single bit error has been detected.

SYM The byte address of the error-correctable bit.

NFI +0058h ECC block 2 parity error detect syndrome address NFI_SYM2_ADDR

Bit	15	14	13	12	11	10	9	8	7	6	5	4	3	2	1	0

Name							SYM									
Type							RO									
Reset							0									

This register identifies the address within ECC block 2 that a single bit error has been detected.

SYM The byte address of the error-correctable bit.

NFI +005Ch ECC block 3 parity error detect syndrome address NFI_SYM3_ADDR

Bit	15	14	13	12	11	10	9	8	7	6	5	4	3	2	1	0
Name							SYM									
Type							RO									
Reset							0									

This register identifies the address within ECC block 3 that a single bit error has been detected.

SYM The byte address of the error-correctable bit.

NFI +0060h ECC block 0 parity error detect syndrome word NFI_SYM0_DAT

Bit	31	30	29	28	27	26	25	24	23	22	21	20	19	18	17	16
Name	ED3								ED2							
Type	RO								RO							
Reset	0								0							

Bit	15	14	13	12	11	10	9	8	7	6	5	4	3	2	1	0
Name	ED1								ED0							
Type	RO								RO							
Reset	0								0							

This register signifies the syndrome word for the corrected ECC block 0. To correct the error, the user should first read **NFI_ SYM0_ADDR** for the address of the correctable word, and then read **NFI_SYM0_DAT**, directly XOR the syndrome word with the data word to obtain the correct word.

NFI +0064h ECC block 1 parity error detect syndrome word NFI_SYM1_DAT

Bit	31	30	29	28	27	26	25	24	23	22	21	20	19	18	17	16
Name	ED3								ED2							
Type	RO								RO							
Reset	0								0							

Bit	15	14	13	12	11	10	9	8	7	6	5	4	3	2	1	0
Name	ED1								ED0							
Type	RO								RO							
Reset	0								0							

This register signifies the syndrome word for the corrected ECC block 0. To correct the error, the user should first read **NFI_ SYM1_ADDR** for the address of the correctable word, and then read **NFI_SYM1_DAT**, directly XOR the syndrome word with the data word to obtain the correct word.

NFI +0068h ECC block 2 parity error detect syndrome word NFI_SYM2_DAT

Bit	31	30	29	28	27	26	25	24	23	22	21	20	19	18	17	16
Name	ED3								ED2							
Type	RO								RO							
Reset	0								0							

Bit	15	14	13	12	11	10	9	8	7	6	5	4	3	2	1	0
Name	ED1								ED0							
Type	RO								RO							
Reset	0								0							

This register signifies the syndrome word for the corrected ECC block 0. To correct the error, the user should first read **NFI_ SYM2_ADDR** for the address of the correctable word, and then read **NFI_SYM2_DAT**, directly XOR the syndrome word with the data word to obtain the correct word.

NFI +006Ch ECC block 3 parity error detect syndrome word NFI_SYM3_DAT

Bit	31	30	29	28	27	26	25	24	23	22	21	20	19	18	17	16
Name	ED3								ED2							
Type	RO								RO							
Reset	0								0							
Bit	15	14	13	12	11	10	9	8	7	6	5	4	3	2	1	0
Name	ED1								ED0							
Type	RO								RO							
Reset	0								0							

This register signifies the syndrome word for the corrected ECC block 0. To correct the error, the user should first read **NFI_ SYM3_ADDR** for the address of the correctable word, and then read **NFI_SYM3_DAT**, directly XOR the syndrome word with the data word to obtain the correct word.\

NFI +0070h NFI ECC error detect indication register NFI_ERRDET

Bit	15	14	13	12	11	10	9	8	7	6	5	4	3	2	1	0
Name													EBLK 3	EBLK 2	EBLK 1	EBLK 0
Type													RO	RO	RO	RO
Reset													0	0	0	0

This register identifies the block in which an uncorrectable error has been detected.

NFI +0080h NFI ECC parity word 0 NFI_PAR0

Bit	15	14	13	12	11	10	9	8	7	6	5	4	3	2	1	0
Name				PAR												
Type				RO												
Reset				0												

This register signifies the ECC parity for the ECC block 0. It 's calculated by the NFI core and can be read by the user. It's generated when writing or reading a page.

Register Address	Register Function	Acronym
NFI +0080h	NFI ECC parity word 0	NFI_PAR0
NFI +0084h	NFI ECC parity word 1	NFI_PAR1
NFI +0088h	NFI ECC parity word 2	NFI_PAR2
NFI +008Ch	NFI ECC parity word 3	NFI_PAR3
NFI +0090h	NFI ECC parity word 4	NFI_PAR4
NFI +0094h	NFI ECC parity word 5	NFI_PAR5
NFI +0098h	NFI ECC parity word 6	NFI_PAR6

NFI +009Ch	NFI ECC parity word 7	NFI_PAR7

Table 29 NFI parity bits register table

6.4.3 Device programming sequence

This section lists the program sequences to successfully use any compliant devices.

For block erase

1. Enable erase complete interrupt (NFI_INTREN = 8h).
2. Write command (NFI_CMD = 60h).
3. Write block address (NFI_ADDR).
4. Set the number of address bytes (NFI_ADDRNOB).
5. Check program status (NFI_PSTA) to see whether the operation has been completed. Omitted if ERASE_CON has been set.
6. Write command (NFI_CMD = D0h). Omitted if ERASE_CON has been set.
7. Check the erase complete interrupt.

For status read

1. Write command (NFI_CMD = 70h).
2. Set single word read for 1 byte (NFI_OPCON = 1100h).
3. Check program status (NFI_PSTA) to see whether the operation has been completed.
4. Read single byte (NFI_DATAR).

For page program

1. Enable write complete interrupt (NFI_INTREN = 2h).
2. Set DMA mode, and hardware ECC mode (NFI_CON = Ah).
3. Write command (NFI_CMD = 80h).
4. Write page address (NFI_ADDR).
5. Set the number of address bytes (NFI_ADDRNOB).
6. Set burst write (NFI_OPCON = 2h).
7. In DMA mode, the signal DMA_REQ controls the access. The user can also check the status of the FIFO (NFI_FIFOCON) and write a pre-specified number of data whenever the FIFO is not full and until the end of page is reached.
8. Check program status (NFI_PSTA) to see whether all operation has been completed.
9. Set ECC parities write. Omitted if hardware ECC mode has been set.
10. Check program status (NFI_PSTA) to see whether the above operation has been completed.

11. Write command (NFI_CMD = 10h). Omitted if PROGRAM_CON has been set.
12. Check the program complete interrupt.

For page read

1. Enable busy ready, read complete, ECC correct indicator, and ECC error indicator interrupt. (NFI_INTREN = 41h).
2. Set DMA mode, and hardware ECC mode. (NFI_CON = 5h).
3. Write command (NFI_CMD = 00h).
4. Write page address (NFI_ADDR).
5. Set the number of address bytes (NFI_ADDRNOB).
6. Check busy ready interrupt.
7. Set burst read (NFI_OPCON = 1h).
8. In DMA mode, the signal DMA_REQ controls the access. The user can also check the status of the FIFO (NFI_FIFOCON) and read a pre-specified number of data whenever the FIFO is not empty and until the end of page is reached.
9. Set ECC parities check. Omitted if hardware ECC mode has been set.
10. Check program status (NFI_PSTA) or check ECC correct and error interrupt.
11. Read the ECC correction or error information.

6.4.4 Device timing control

This section illustrates the timing diagram.

The ideal timing for write access is listed as listed in **Table 30**.

Parameter	Description	Timing specification	Timing at 13MHz (WST, WH) = (0,0)	Timing at 26MHz (WST, WH) = (0,0)	Timing at 52MHz (WST, WH) = (1,0)
T_{WC1}	*Write cycle time*	3T + WST + WH	230.8ns	105.4ns	76.9ns
T_{WC2}	*Write cycle time*	2T + WST + WH	153.9ns	76.9ns	57.7ns
T_{DS}	*Write data setup time*	1T + WST	76.9ns	38.5ns	38.5ns
T_{DH}	*Write data hold time*	1T + WH	76.9ns	38.5ns	19.2ns
T_{WP}	*Write enable time*	1T + WST	76.9ns	38.5ns	38.5ns
T_{WH}	*Write high time*	1T + WH	76.9ns	38.5ns	19.2ns
T_{CLS}	*Command latch enable setup time*	1T	76.9ns	38.5ns	19.2ns
T_{CLH}	*Command latch enable hold time*	1T + WH	76.9ns	38.5ns	19.2ns
T_{ALS}	*Address latch enable setup time*	1T	76.9ns	38.5ns	19.2ns
T_{ALH}	*Address latch enable hold time*	1T + WH	76.9ns	38.5ns	19.23ns
F_{WC}	*Write data rate*	1 / T_{WC2}	6.5Mbytes/s	13Mbytes/s	17.3Mbytes/s

MediaTek Inc. Confidential

Table 30 Write access timing

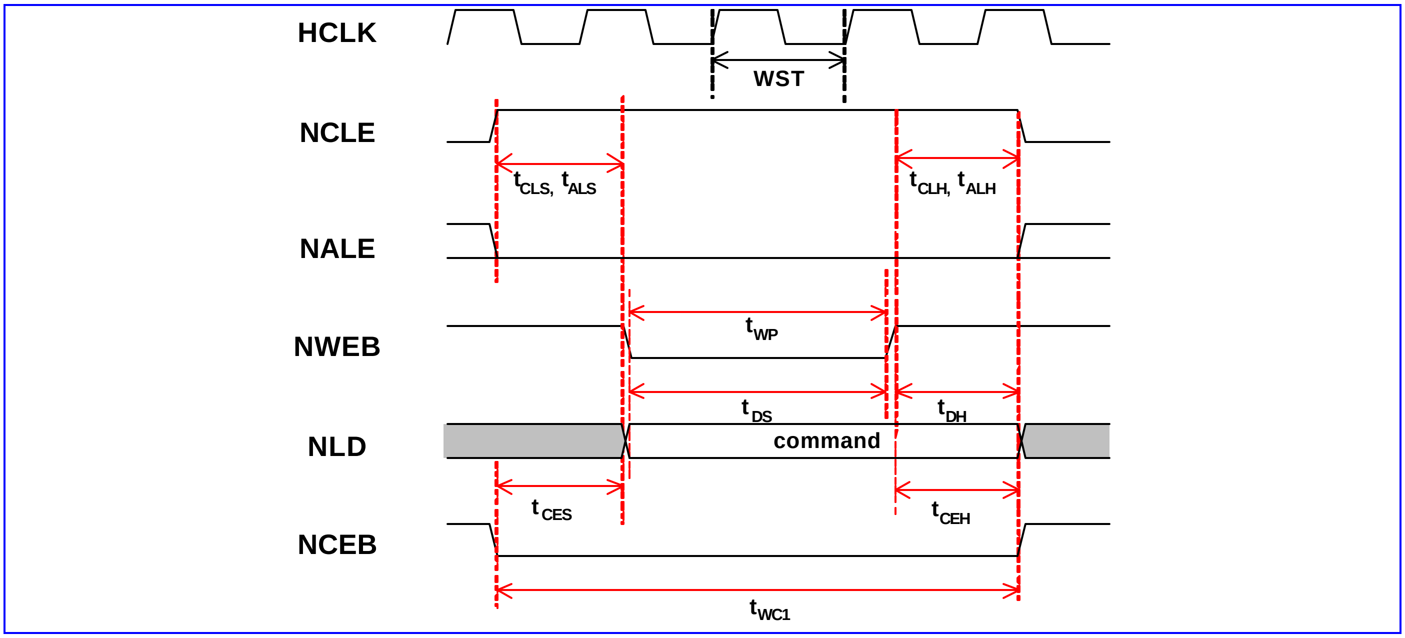

Figure 41 Command input cycle (1 wait state).

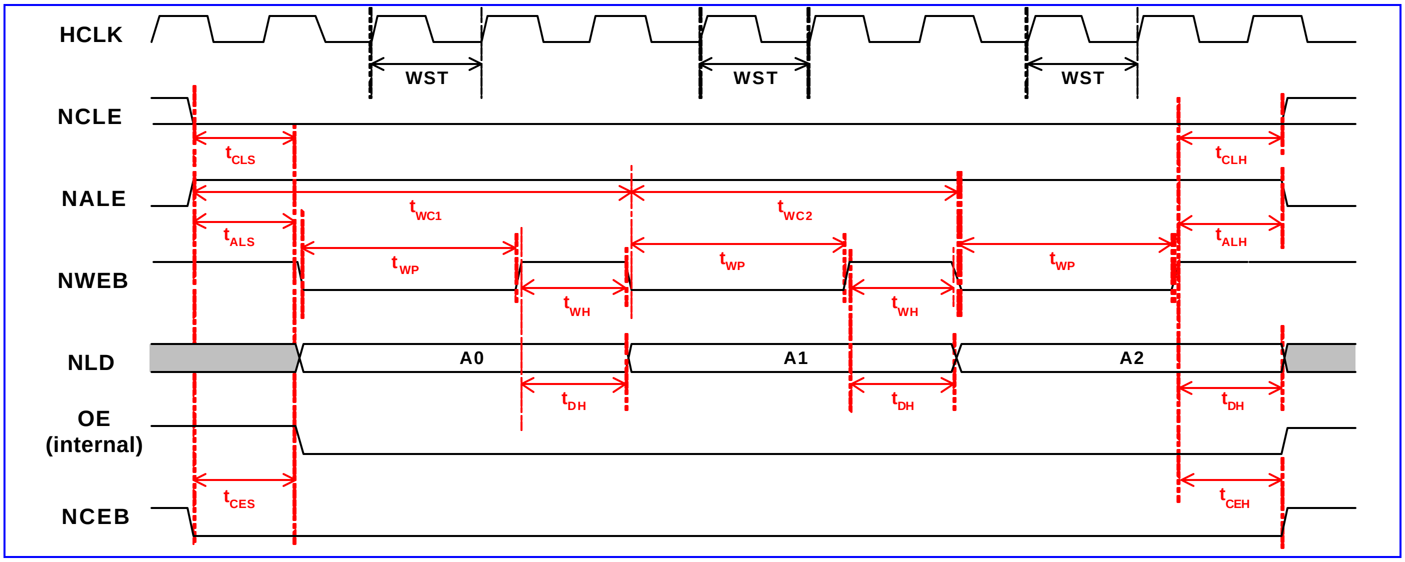

Figure 42 Address input cycle (1 wait state)

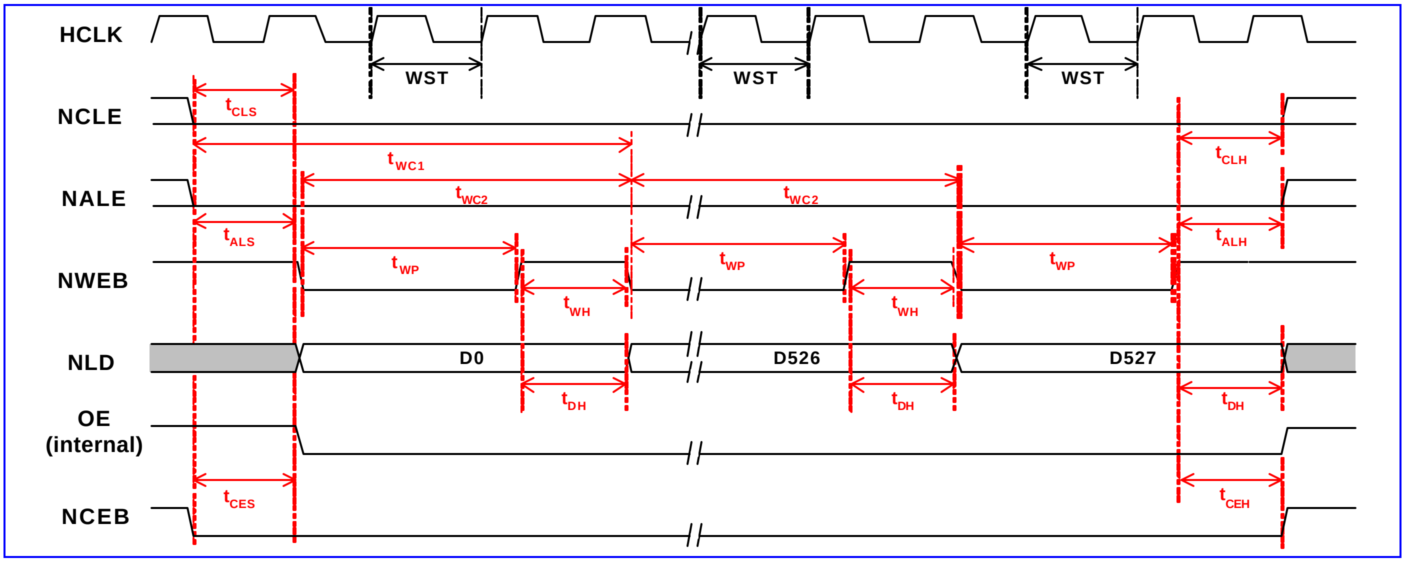

Figure 43 Consecutive data write cycles (1 wait state, 0 hold time extension)

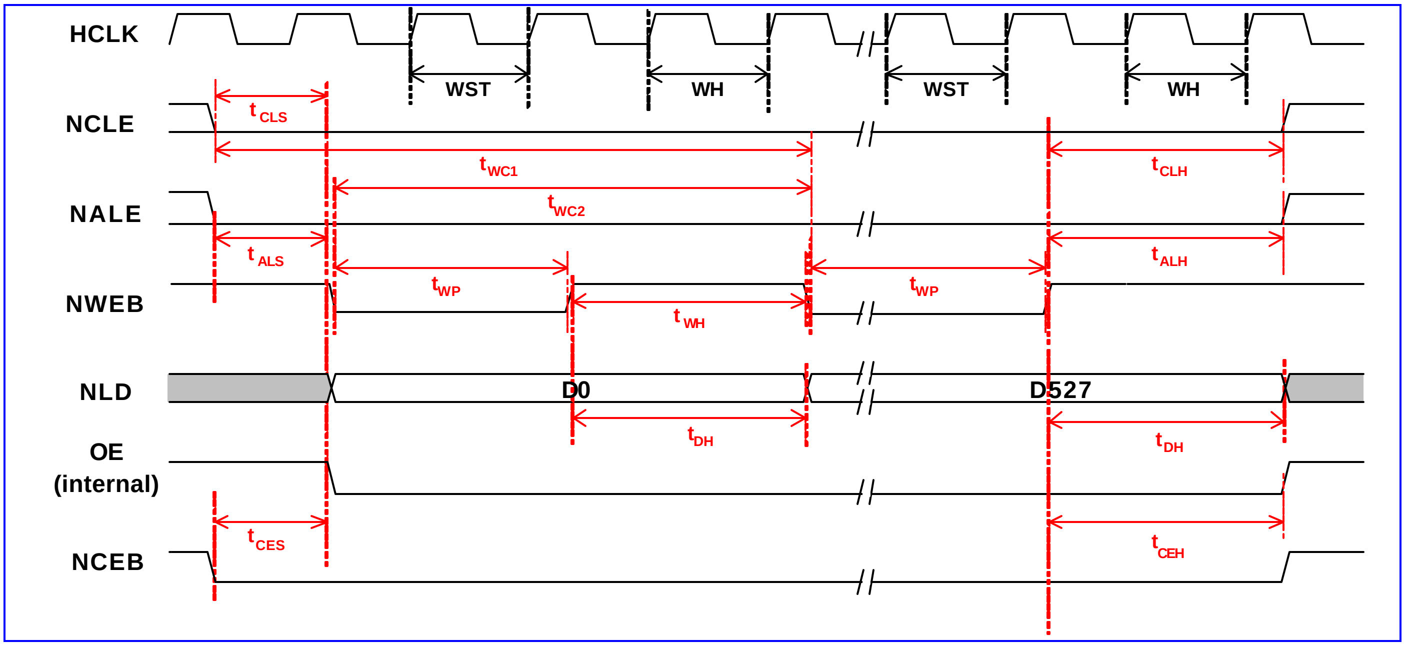

Figure 44 Consecutive data write cycles (1 wait state, 1 hold time extension)

The ideal timing for read access is as listed in **Table 7**.

Parameter	Description	Timing specification	Timing at 13MHz (RLT, WH) = (0,0)	Timing at 26MHz (RLT, WH) = (1,0)	Timing at 52MHz (RLT, WH) = (2,0)
T_{RC1}	*Read cycle time*	3T + RLT + WH	230.8ns	153.8ns	96.2ns
T_{RC2}	*Read cycle time*	2T + RLT + WH	153.9ns	115.4ns	76.9ns
T_{DS}	*Read data setup time*	1T + RLT	76.9ns	76.9ns	57.7ns
T_{DH}	*Read data hold time*	1T + WH	76.9ns	38.5ns	19.2ns
T_{RP}	*Read enable time*	1T + RLT	76.9ns	76.9ns	57.7ns
T_{RH}	*Read high time*	1T + WH	76.9ns	38.5ns	19.2ns

T_{CLS}	*Command latch enable setup time*	1T	76.9ns	38.5ns	19.2ns
T_{CLH}	*Command latch enable hold time*	1T + WH	76.9ns	38.5ns	19.2ns
T_{ALS}	*Address latch enable setup time*	1T	76.9ns	38.5ns	19.2ns
T_{ALH}	*Address latch enable hold time*	1T + WH	76.9ns	38.5ns	19.2ns
F_{RC}	*Write data rate*	1 / T_{RC2}	6.5Mbytes/s	8.7Mbytes/s	13Mbytes/s

Table 31 Read access timing

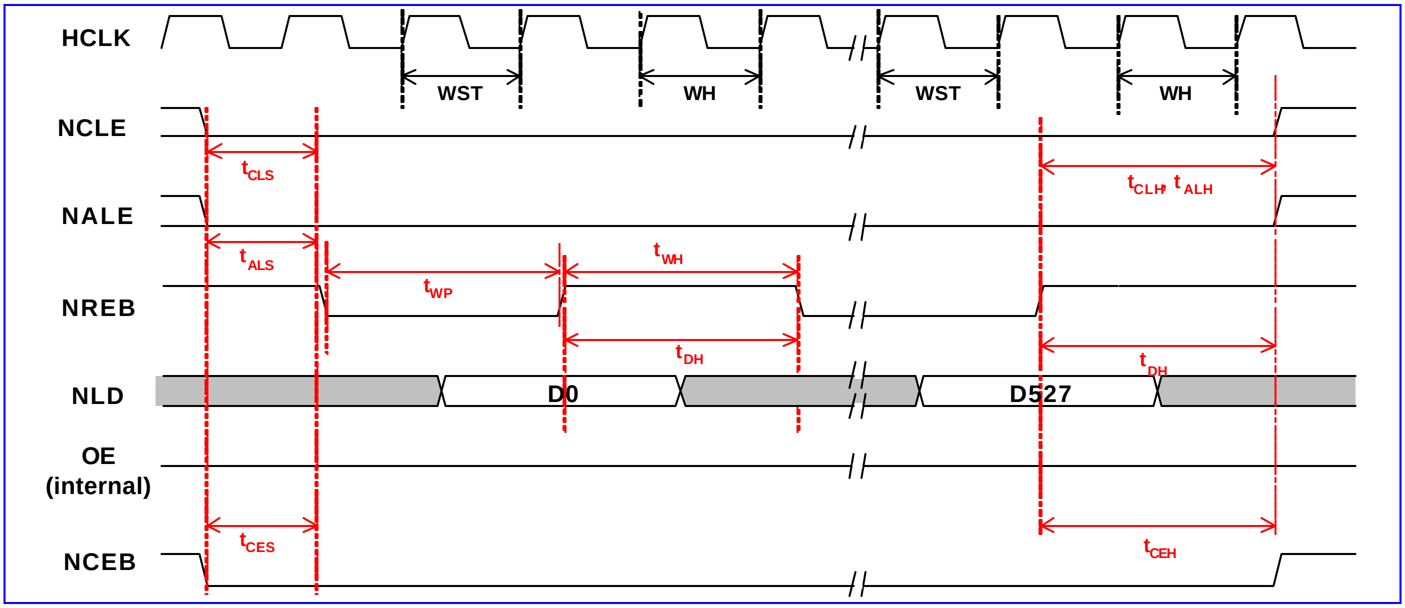

Figure 45 Serial read cycle (1 wait state, 1 hold time extension)

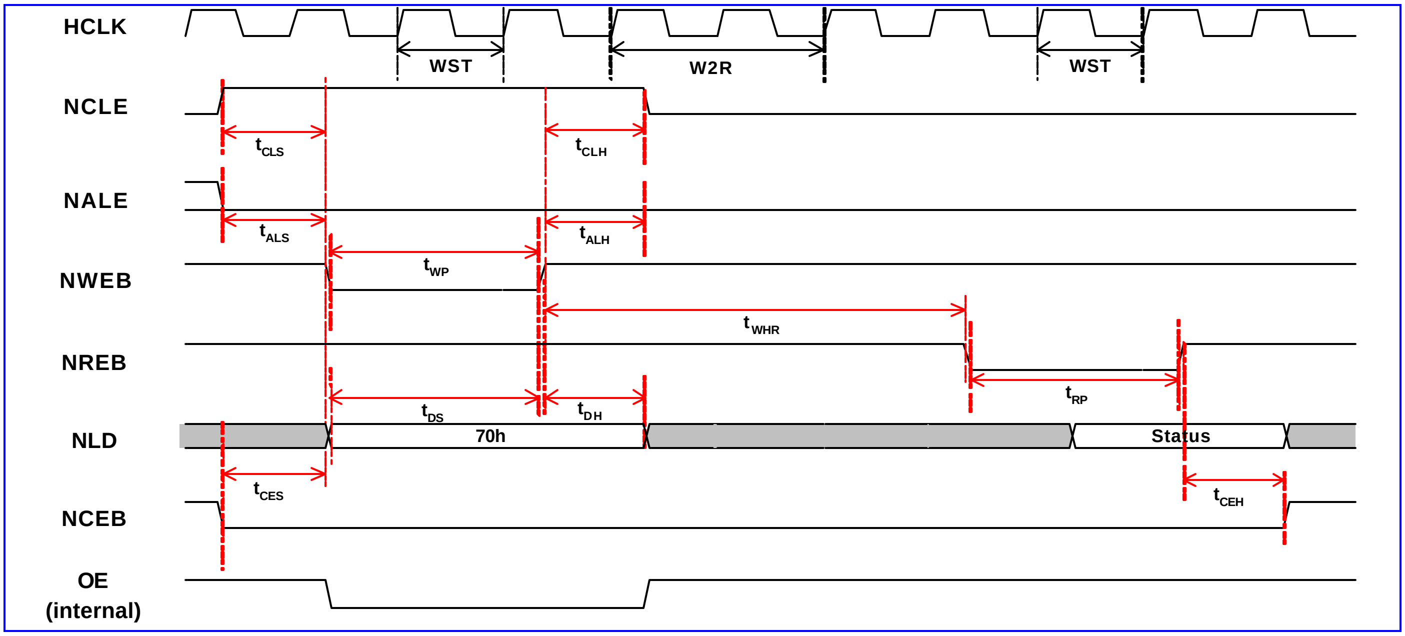

Figure 46 Status read cycle (1 wait state)

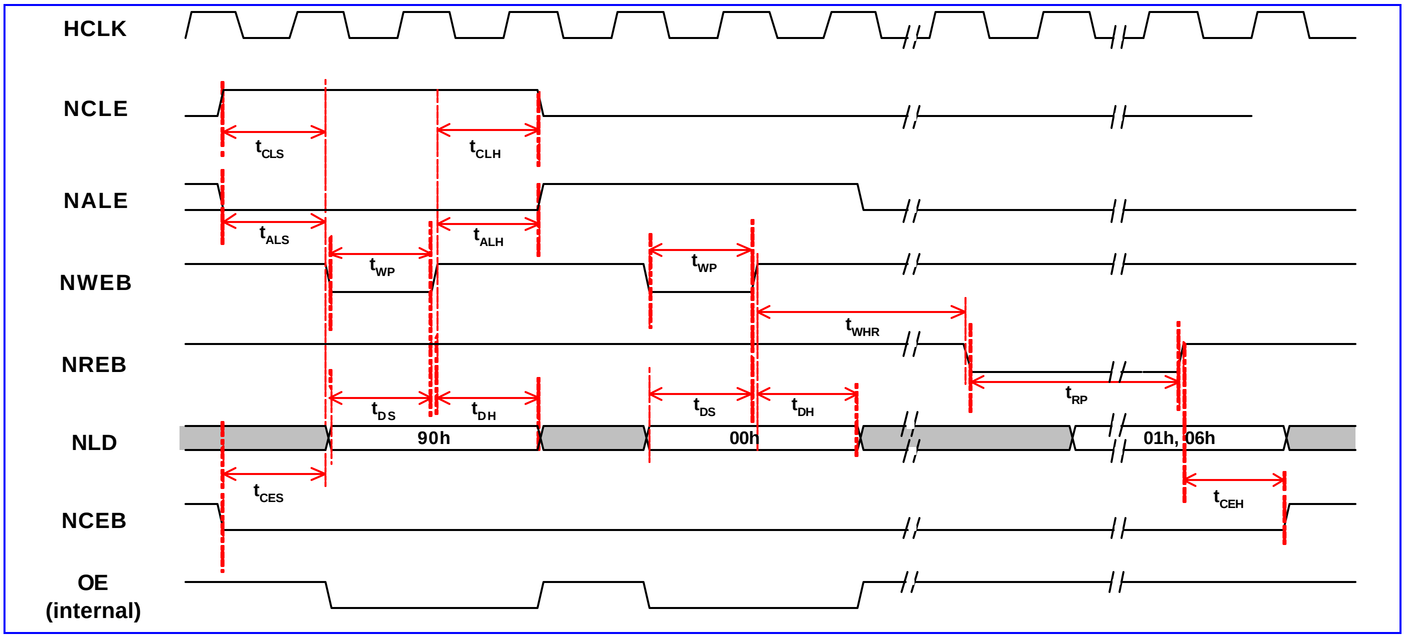

Figure 47 ID and manufacturer read (0 wait state)

6.5 USB Device Controller

6.5.1 General Description

MT6218B provides a USB function interface that is in compliance with Universal Serial Bus Specification Rev 1.1. The USB device controller supports only full-speed (12Mbps) operation. The cellular phone can make use of this widely available USB interfaces to transmit/receive data with USB hosts, typically PC/laptop.

There provides 5 endpoints in the USB device controller besides the mandatory control endpoint, where among them, 3 endpoints are for IN transactions and 2 endpoints are for OUT transactions. Word, half-word, and byte access are allowed for loading and unloading the FIFO. 4 DMA channels are equipped with the controller to accelerate the data transfer. The features of the endpoints are as follows:

1. Endpoint 0: The control endpoint feature 16 bytes FIFO and accommodates maximum packet size of up to 16 bytes. DMA transfer is not supported.
2. IN endpoint 1: It features 64 bytes FIFO and accommodates maximum packet size of up to 64 bytes. DMA transfer is supported.
3. IN endpoint 2: It features 64 bytes FIFO and accommodates maximum packet size of up to 64 bytes. DMA transfer is supported.
4. IN endpoint 3: It features 16-byte FIFO and accommodates maximu m packet size of 16 bytes. DMA transfer is not supported.
5. OUT endpoint 1: It features 64 bytes FIFO and accommodates maximum packet size of 64 bytes. DMA transfer is supported.
6. OUT endpoint 2: It features 64 bytes FIFO and accommodates maximum packet size of 64 bytes. DMA transfer is supported.

For each endpoint except the endpoint 0, if the packet size is small than half the size of the FIFO, at most 2 packets can be buffered.

This unit is highly software configurable. All endpoints except the control endpoint can be configured to be a bulk, interrupt or isochronous endpoints. Composite device is also supported. The IN endpoint 1 and the OUT endpoint 1 shares the same endpoint number but they can be use separately. So is the situation as the IN endpoint 2 and the OUT endpoint 2.

The USB device uses cable-powered feature for the transceiver but only drains little current. An external resistor (nominally 1.5Kohm) is required to be placed across Vbus and D+ signal. Two additional external serial resistors might be needed to place on the output of D+ and D- signals to make the output impedance equivalent to 28~44Ohm.

6.5.2 Register Definitions

70000000h USB function address register USB_FADDR

Bit	7	6	5	4	3	2	1	0
Name	UPD	FADDR						
Type	RO	R/W						
Reset	0	0						

This is an 8-bit register that should be written with the function's 7-bit address (received through a SET_ADDRESS description). It is then used for decoding the function address in subsequent token packets.

UPD Set when FADDR is written. It's cleared when the new address takes effect (at the end of the current transfer).

FADDR The function address of the device.

70000001h USB power control register USB POWER

Bit	7	6	5	4	3	2	1	0
Name	ISO_UP			SWRSTENAB	RESET	RESUME	SUSPMODE	SUSPENAB
Type	R/W			R/W	RO	R/W	RO	R/W
Reset	0			0	0	0	0	0

ISO_UP When set by the MCU, the core will wait for an SOF token from the time INPKTRDY is set before sending the packet.

SWRSTENAB Set by the MCU to enable the mode in which the device can only be reset by the software after detecting reset signals on the bus. In case the software is delayed by other high-priority process and can't make it to read the command from the buffer before the hardware reset the device after detecting the reset signal on the bus, the command will be lost. That's why the software-reset mode is effective. When the flag is enabled, the hardware state machine can't reset by itself, but rather can be reset by the software. In that sense, the software and the hardware can keep synchronous on detecting the reset signal.

RESET The read-only bit is set when **Reset** signaling is present on the bus.

RESUME Set by the MCU to generate **Resume** signaling when the function is in suspend mode. The MCU should clear this bit after 10 ms (a maximum of 15 ms) to end Resume signaling.

SUSPMODE Set by the USB core when **Suspend** mode is entered. Cleared when the CPU reads the interrupt register, or sets the Resume bit of this register.

SUSPENAB Set by the MCU to enable device into **Suspend** mode when Suspend signaling is received on the bus.

70000002h USB IN endpoints interrupt register USB_INTRIN

Bit	7	6	5	4	3	2	1	0

Name					EP3	EP2	EP1	EP0
Type					RC	RC	RC	RC
Reset					0	0	0	0

This is a read-only register that indicates which of the interrupts for IN endpoints 0 to 3 are currently active. All active interrupts will be cleared when this register is read.

EP3 IN endpoint #3 interrupt.

EP2 IN endpoint #2 interrupt.

EP1 IN endpoint #1 interrupt.

EP0 IN endpoint #0 interrupt.

70000004h USB OUT endpoints interrupt register USB_INTROUT

Bit	7	6	5	4	3	2	1	0
Name						EP2	EP1	
Type						RC	RC	
Reset						0	0	

This is a read-only register that indicates which of the interrupts for OUT endpoints 1 and 2 are currently active. All active interrupts will be cleared when this register is read.

EP2 OUT endpoint #2 interrupt.

EP1 OUT endpoint #1 interrupt.

70000006h USB general interrupt register USB_INTRUSB

Bit	7	6	5	4	3	2	1	0
Name					SOF	RESET	RESUME	SUSP
Type					RC	RC	RC	RC
Reset					0	0	0	0

This is a read-only register that indicates which USB interrupts are currently active. All active interrupts will be cleared when this register is read.

SOF Set at the start of each frame.

RESET Set when **Reset** signaling is detected on the bus.

RESUME Set when Resume signaling is detected on the bus while the USB core is in suspend mode.

SUSP Set when Suspend signaling is detected on the bus.

70000007h USB IN endpoints interrupt enable register USB_INTRINE

Bit	7	6	5	4	3	2	1	0
Name					EP3	EP2	EP1	EP0
Type					R/W	R/W	R/W	R/W
Reset					1	1	1	1

This register provides interrupt enable bits for the interrupts in USB_INTRIN. On reset, the bits corresponding to endpoint 0 and all IN endpoints are set to 1.

EP3 IN endpoint 3 interrupt enable.

EP2 IN endpoint 2 interrupt enable.

EP1 IN endpoint 1 interrupt enable.

EP0 IN endpoint 0 interrupt enable.

70000009h USB OUT endpoints interrupt enable register USB_INTROUTE

Bit	7	6	5	4	3	2	1	0
Name						EP2	EP1	
Type						R/W	R/W	
Reset						1	1	

This register provides interrupt enable bits for the interrupts in USB_INTROUT. On reset, the bits corresponding to all OUT endpoints are set to 1.

EP2 OUT endpoint 2 interrupt enable.

EP1 OUT endpoint 1 interrupt enable.

7000000Bh USB general interrupt enable register USB_INTRUSBE

Bit	7	6	5	4	3	2	1	0
Name					SOF	RESET	RESUME	SUSP
Type					R/W	R/W	R/W	R/W
Reset					0	1	1	0

This register provides interrupt enable bits for each of the interrupts for USB_INTRUSB.

SOF SOF interrupt enable

RESET Reset interrupt enable

RESUME Resume interrupt enable

SUSP Suspend interrupt enable

7000000Ch USB frame count #1 register USB_FRAME1

Bit	7	6	5	4	3	2	1	0
Name	NUML							
Type	RO							
Reset	0							

The register holds the lower 8 bits of the last received frame number.

NUML The lower 8 bits of the frame number.

7000000Dh USB frame count #2 register USB_FRAME2

Bit	7	6	5	4	3	2	1	0
Name						NUMH		
Type						RO		
Reset						0		

The register holds the upper 3 bits of the last received frame number.

NUMH The upper 3 bits of the frame number.

7000000Eh USB endpoint register index USB_INDEX

Bit	7	6	5	4	3	2	1	0
Name					INDEX			
Type					R/W			
Reset					0			

The register determines which endpoint control/status registers are to be accessed at addresses USB+10h to USB+17h. Each IN endpoint and each OUT endpoint have their own set of control/status registers. Only one set of IN control/status and one set of OUT control/status registers appear in the memory map at any one time. Before accessing an endpoint's control/status registers, the endpoint number should be written to the USB_INDEX register to ensure that the correct control/status registers appear in the memory map.

INDEX The index of the endpoint.

7000000Fh USB reset control USB_RSTCTRL

Bit	7	6	5	4	3	2	1	0
Name	SWRST				RSTCNTR			
Type	R/W				R/W			
Reset	0				0			

The register is used to control the reset process when the device detects the reset command issued from the host.

SWRST If the flag SWRSTENAB in the register USB_POWER is set to be 1, the software enable mode is enabled, and the device can be reset by writing this flag to be 1.

RSTCNTR The field signifies the duration for the reset operation to take place after detecting reset signal on the bus. It's only enabled when software reset is not enabled. If the value is equal to zero, the duration is 2.5us. Otherwise, the duration is equal to this value multiplied by 341 and then added by 2.5 in unit of us. The range consequently starts from 2.5us to 5122.5 us.

70000011h USB control/status register for endpoint 0 USB_EP0_CSR

Bit	7	6	5	4	3	2	1	0
Name	SSETUPEND	SOUTPKTRDY	SENDSTALL	SETUPEND	DATAEND	SENTSTALL	INPKTRDY	OUTPKTRDY
Type	R/WS	R/WS	R/WS	RO	R/WS	R/WC	R/WS	RO
Reset	0	0	0	0	0	0	0	0

The register is used for all control/status of endpoint 0. The register is active when USB_INDEX register is set to 0.

SSETUPEND The MCU writes a 1 to this bit to clear the SETUPEND bit. It's cleared automatically. Only active when a transaction has been started.

SOUTPKTRDY The MCU writes a 1 to this bit to clear the OUTPKTRDY bit. It's cleared automatically. Only active when an OUT transaction has been started.

SENDSTALL The MCU writes a 1 to this bit to terminate the current transaction. The STALL handshake will be transmitted and then this bit will be cleared automatically.

SETUPEND This bit will be set when a control transaction ends before the DATAEND bit has been set. An interrupt will be generated and FIFO flushed at this time. The bit is cleared by the MCU writing a 1 to the SSETUPEND bit.

DATAEND The MCU sets this bit:

1. When setting INPKTRDY for the last data packet.
2. When clearing OUTPKTRDY after unloading the last data packet.
3. When setting INPKTRDY for a zero length data packet.

It's cleared automatically

SENTSTALL This bit is set when a STALL handshake is transmitted. The MCU should clear this bit by writing a 0.

INPKTRDY The MCU sets this bit after loading a data packet into the FIFO. It is cleared automatically when the data packet has been transmitted. An interrupt is generated when this bit is set.

OUTPKTRDY This bit is set when a data packet has been received. An interrupt is generated when this bit is set. The MCU clears this bit by setting the SOUTPKTRDY bit.

70000016h USB byte count register USB_EP0_COUNT

Bit	7	6	5	4	3	2	1	0
Name		COUNT						
Type		RO						
Reset		0						

The register indicates the number of received data bytes in the endpoint 0. The value returned is valid while OUTPKTRDY bit of USB_EP0_CSR register is set. The register is active when USB_INDEX register is set to 0.

COUNT The number of received data bytes in the endpoint 0.

70000010h USB maximum packet size register for IN endpoint 1~3 USB_EP_INMAXP

Bit	7	6	5	4	3	2	1	0
Name	MAXP							
Type	R/W							
Reset	0							

The register holds the maximum packet size for transactions through the currently selected IN endpoint – in units of 8 bytes. In setting the value, the programmer should note the constraints placed by the USB Specification on packet size for bulk interrupt, and isochronous transactions in full-speed operations. There is an INMAXP register for each IN endpoint except endpoint 0. The registers are active when USB_INDEX register is set to 1, 2, and 3, respectively.

The value written to this register should match the ***wMaxPacketSize*** field of the standard endpoint descriptor for the associated endpoint. A mismatch could cause unexpected results. If a value greater than the configured IN FIFO size for the endpoint is written to the register, the value will be automatically changed to the IN FIFO size. If the value written to the register is less than, or equal to, half the IN FIFO size, two IN packets can be buffered. The configured IN FIFO size for the endpoint 1, 2, and 3, are 64 bytes, 64 bytes, and 16 bytes, respectively.

The register is reset to 0. If the register is changed after packets have been sent from the endpoint, the endpoint IN FIFO should be completely flushed after writing the new value to the register.

MAXP The maximum packet size in units of 8 bytes.

70000011h USB control/status register #1 for IN endpoint 1~3 USB_EP_INCSR1

Bit	7	6	5	4	3	2	1	0
Name		CLRDATATOG	SENTSTALL	SENDSTALL	FLUSHFIFO	UNDERRUN	FIFONOTEMPTY	INPKTRDY
Type		WO	R/WC	R/W	WO	R/WC	RO	R/WS
Reset		0	0	0	0	0	0	0

The register provides control and status bits for IN transactions through the currently selected endpoint. There is an INCSR1 register for each IN endpoint except endpoint 0. The registers are active when USB_INDEX register is set to 1, 2, and 3, respectively.

MediaTek Inc. Confidential

CLRDATATOG The MCU writes a 1 to this bit to reset the endpoint IN data toggle to 0.

SENTSTALL The bit is set when a STALL handshake is transmitted. The FIFO is flushed and the INPKTRDY bit is cleared. The MCU should clear this bit by writing a 0 to this bit.

SENDSTALL The MCU writes a 1 to this bit to issue a STALL handshake to an IN token. The MCU clears this bit to terminate the stall condition.

FLUSHFIFO The MCU writes a 1 to this bit to flush the next packet to be transmitted from the endpoint IN FIFO. The FIFO pointer is reset and the INPKTRDY bit is cleared. If the FIFO contains two packets, FLUSHFIFO will need to be set twice to completely clear the FIFO.

UNDERRUN In isochronous mode, this bit is set when a zero length data packet is sent after receiving an IN token with the INPKTRDY bit not set. In Bulk/Interrupt mode, this bit is set when a NAK is returned in response to an IN token. The MCU should clear this bit by writing a 0 to this bit.

FIFONOTEMPTY This bit is set when there is at least 1 packet in the IN FIFO.

INPKTRDY The MCU sets this bit after loading a data packet into the FIFO. Only active when an IN transaction has been started. It is cleared automatically when a data packet has been transmitted. An interrupt is generated (if enabled) when the bit is cleared.

70000012h USB control/status register #2 for IN endpoint 1~3 USB_EP_INCSR2

Bit	7	6	5	4	3	2	1	0
Name	AUTOSET	ISO	MODE	DMAENAB	RFCDATATOG			
Type	R/W	R/W	R/W	R/W	R/W			
Reset	0	0	0	0	0			

The register provides further control bits for IN transactions through the currently selected endpoint. There is an INCSR2 register for each IN endpoint except endpoint 0. The registers are active when USB_INDEX register is set to 1, 2, and 3, respectively.

AUTOSET If the MCU sets the bit, INPKTRDY will be automatically set when data of the maximum packet size (value in INMAXP) is loaded into the IN FIFO. If a packet of less than the maximum packet size is loaded, then INPKTRDY will have to be set manually. When 2 packets are in the IN FIFO then INPKTRDY will also be automatically set when the first packet has been sent, if the second packet is the maximum packet size.

ISO The MCU sets this bit to enable the IN endpoint for isochronous transfer, and clears it to enable the IN endpoint for bulk/interrupt transfers.

MODE The MCU sets this bit to enable the endpoint direction as IN, and clears it to enable the endpoint direction as OUT. It's valid only where the same endpoint FIFO is used for both IN and OUT transaction.

DMAENAB The MCU sets this bit to enable the DMA request for the IN endpoint.

FRCDATATOG The MCU sets this bit to force the endpoint's IN data toggle to switch after each data packet is sent regardless of whether an ACK was received. This can be used by interrupt IN endpoints which are used to communicate rate feedback for isochronous endpoints.

70000013h USB maximum packet size register for OUT endpoint 1~2 USB_EP_OUTMAXP

Bit	7	6	5	4	3	2	1	0
Name	MAXP							
Type	R/W							

Reset	0

This register holds the maximum packet size for transactions through the currently selected OUT endpoint – in units of 8 bytes. In setting this value, the programmer should note the constraints placed by the USB specification on packet sizes for bulk, interrupt, and isochronous transactions in full speed operations. There is an OUTMAXP register for each OUT endpoint except endpoint 0. The registers are active when USB_INDEX register is set to 1 and 2, respectively.

The value written to this register should match the ***wMaxPacketSize*** field of the standard endpoint descriptor for the associated endpoint. A mismatch could cause unexpected results. The total amount of data represented by the value written to this register must not exceed the FIFO size for the OUT endpoint, and should not exceed half the FIFO size if double buffering is required. If a value greater than the configured OUT FIFO size for the endpoint is written to the register, the value will be automatically changed to the OUT FIFO size. If the value written to the register is less than, or equal to, half the OUT FIFO size, two OUT packets can be buffered. The configured IN FIFO size for the endpoint 1 and 2 are both 64 bytes.

MAXP The maximum packet size in units of 8 bytes.

70000014h USB control/status register #1 for OUT endpoint 1~2 USB_EP_OUTCSR1

Bit	7	6	5	4	3	2	1	0
Name	CLRDATATOG	SENTSTALL	SENDSTALL	FLUSHFIFO	DATAERROR	OVERRUN	FIFOFULL	OUTPKTRDY
Type	WO	R/WC	R/W	WO	RO	R/WC	RO	R/WC
Reset	0	0	0	0	0	0	0	0

The register provides control status bits for OUT transactions through the currently selected endpoint. The registers are active when USB_INDEX register is set to 1 and 2, respectively.

CLRDATATOG The MCU writes a 1 to this bit to reset the endpoint data toggle to 0.

SENTSTALL The bit is set when a STALL handshake is transmitted. The MCU should clear this bit by writing a 0.

SENDSTALL The MCU writes a 1 to this bit to issue a STALL handshake. The MCU clears this bit to terminate the stall condition. This bit has no effect if the OUT endpoint is in isochronous mode.

FLUSHFIFO The MCU writes a 1 to this bit to flush the next packet to be read from the endpoint OUT FIFO. If the FIFO contains two packets, FLUSHFIFO will need to be set twice to completely clear the FIFO.

DATAERROR The bit is set when OUTPKTRDY is set if the data packet has a CRC or bit-stuff error. It is cleared when OUTPKTRDY is cleared. This bit is only valid in isochronous mode.

OVERRUN The bit is set if an OUT packet cannot be loaded into the OUT FIFO. The MCU should clear the bit by writing a zero. This bit is only valid in isochronous mode.

FIFOFULL This bit is set when no more packets can be loaded into the OUT FIFO.

OUTPKTRDY The bit is set when a data packet has been received. The MCU should clear (write a 0 to) the bit when the packet has been unloaded from the OUT FIFO. An interrupt is generated when the bit is set.

70000015h USB control/status register #2 for OUT endpoint 1~2 USB_EP_OUTCSR2

Bit	7	6	5	4	3	2	1	0
Name	AUTOCLEAR	ISO	DMAENAB	DMAMODE				
Type	R/W	R/W	R/W	R/W				
Reset	0	0	0	0				

The register provides further control bits for OUT transactions through the currently selected endpoint. The registers are active when USB_INDEX register is set to 1 and 2, respectively.

AUTOCLEAR If the MCU sets this bit then the OUTPKTRDY bit will be automatically cleared when a packet of OUTMAXP bytes has been unloaded from the OUT FIFO. When packets of less then the maximum packet size are unloaded, OUTPKTRDY will have to be cleared manually.

ISO The MCU sets this bit to enable the OUT endpoint for isochronous transfers, and clears it to enable the OUT endpoint for bulk/interrupt transfers.

DMAENAB The MCU sets this bit to enable the DMA request for the OUT endpoint.

DMAMODE Two modes of DMA operation are supported: DMA mode 0 in which a DMA request is generated for all received packets, together with an interrupt (if enabled); and DMA mode 1 in which a DMA request (but no interrupt) is generated for OUT packets of size OUTMAXP bytes and an interrupt (but no DMA request) is generated for OUT packets of any other size. The MCU sets the bit to select DMA mode 1 and clears this bit to select DMA mode 0.

70000016h USB OUT endpoint byte counter register LSB part for endpoint 1~2 USB_EP_COUNT1

Bit	7	6	5	4	3	2	1	0
Name	NUML							
Type	RO							
Reset	0							

The register holds the lower 8 bits of the number of received data bytes in the packet in the FIFO associated with the currently selected OUT endpoint. The value returned is valid while OUTPKTRDY in the register USB_OUTCSR1 is set. The registers are active when USB_INDEX register is set to 1 and 2, respectively.

NUML The lower 8 bits of the number of received data bytes for the OUT endpoint.

70000017h USB OUT endpoint byte counter register MSB part for endpoint 1~2 USB_EP_COUNT2

Bit	7	6	5	4	3	2	1	0
Name						NUMH		
Type						RO		
Reset						0		

The register holds the upper 3 bits of the number of received data bytes in the packet in the FIFO associated with the currently selected OUT endpoint. The value returned is valid while OUTPKTRDY in the register USB_EP_OUTCSR1 is set. The registers are active when USB_INDEX register is set to 1 and 2, respectively.

NUMH The upper 8 bits of the number of received data bytes for the OUT endpoint.

70000020h USB endpoint 0 FIFO access register USB_EP0_FIFO

Bit	31	30	29	28	27	26	25	24	23	22	21	20	19	18	17	16
Name	DB3								DB2							
Type	R/W								R/W							
Bit	15	14	13	12	11	10	9	8	7	6	5	4	3	2	1	0
Name	DB1								DB0							
Type	R/W								R/W							

MediaTek Inc. Confidential

The register provides MCU access to the FIFO for the endpoint 0. Writing to this register loads data into the FIFO for the endpoint 0. Reading from this register unloads data from the FIFO for the endpoint 0.

The register provides word, half-word, and byte mode access. If word or half-word accesses are performed, the less significant byte corresponds to the prior byte to load in or unload from the FIFO.

DB0 The first byte to be loaded into or unloaded from the FIFO.
DB1 The second byte to be loaded into or unloaded from the FIFO.
DB2 The third byte to be loaded into or unloaded from the FIFO.
DB3 The forth byte to be loaded into or unloaded from the FIFO.

70000024h USB endpoint 1 FIFO access register USB_EP1_FIFO

Bit	31	30	29	28	27	26	25	24	23	22	21	20	19	18	17	16
Name	DB3								DB2							
Type	R/W								R/W							
Bit	15	14	13	12	11	10	9	8	7	6	5	4	3	2	1	0
Name	DB1								DB0							
Type	R/W								R/W							

The register provides MCU access to the IN FIFO and the OUT FIFO for the endpoint 1. Writing to the register loads data into the IN FIFO for the endpoint 1. Reading from the register unloads data from the OUT FIFO for the endpoint 1.

The register provides word, half-word, and byte mode access. If word or half-word accesses are performed, the less significant byte corresponds to the prior byte to load in the IN FIFO or unload from the OUT FIFO.

DB0 The first byte to be loaded in the IN FIFO or unloaded from the OUT FIFO.
DB1 The second byte to be loaded in the IN FIFO or unloaded from the OUT FIFO.
DB2 The third byte to be loaded in the IN FIFO or unloaded from the OUT FIFO.
DB3 The forth byte to be loaded in the IN FIFO or unloaded from the OUT FIFO.

70000028h USB endpoint 2 FIFO access register USB_EP2_FIFO

Bit	31	30	29	28	27	26	25	24	23	22	21	20	19	18	17	16
Name	DB3								DB2							
Type	R/W								R/W							
Bit	15	14	13	12	11	10	9	8	7	6	5	4	3	2	1	0
Name	DB1								DB0							
Type	R/W								R/W							

The register provides MCU access to the IN FIFO and the OUT FIFO for the endpoint 2. Writing to the register loads data into the IN FIFO for the endpoint 2. Reading from the register unloads data from the OUT FIFO for the endpoint 2.

The register provides word, half-word, and byte mode access. If word or half-word accesses are performed, the less significant byte corresponds to the prior byte to load in the IN FIFO or unload from the OUT FIFO.

DB0 The first byte to be loaded into the IN FIFO or unloaded from the OUT FIFO.
DB1 The second byte to be loaded into the IN FIFO or unloaded from the OUT FIFO.
DB2 The third byte to be loaded into the IN FIFO or unloaded from the OUT FIFO.
DB3 The forth byte to be loaded into the IN FIFO or unloaded from the OUT FIFO.

7000002Ch USB endpoint 3 FIFO access register USB_EP3_FIFO

Bit	31	30	29	28	27	26	25	24	23	22	21	20	19	18	17	16
Name	DB3								DB2							
Type	R/W								R/W							

Bit	15	14	13	12	11	10	9	8	7	6	5	4	3	2	1	0
Name	DB1								DB0							
Type	R/W								R/W							

The register provides MCU access to the IN FIFO for the endpoint 3. Writing to the register loads data into the IN FIFO for the endpoint 3.

The register provides word, half-word, and byte mode access. If word or half-word accesses are performed, the less significant byte corresponds to the prior byte to load in the IN FIFO.

DB0 The first byte to be loaded into the IN FIFO.

DB1 The second byte to be loaded into the IN FIFO.

DB2 The third byte to be loaded into the IN FIFO.

DB3 The forth byte to be loaded into the IN FIFO.

6.6 Memory Stick and SD Memory Card Controller

6.6.1 Introduction

The controller fully supports the Memory Stick bus protocol as defined in Format Specification version 2.0 of Memory Stick Standard (Memory Stick PRO) and the SD Memory Card bus protocol as defined in SD Memory Card Specification Part 1 Physical Layer Specification version 1.0 as well as the MultiMediaCard (MMC) bus protocol as defined in MMC system specification version 2.2. Since SD Memory Card bus protocol is backward compatible to MMC bus protocol, the controller is capable of working well as the host on MMC bus under control of proper firmware. However, the controller only can be configured as either the host of Memory Stick or the host of SD/MMC Memory Card at one time. The controller is also abbreviated as MS/SD controller in the following. The following is main features of the controller.

- Interface with MCU by APB bus
- 16/32-bit access on APB bus
- 16/32-bit access for control registers
- 32-bit access for FIFO
- Shared pins for Memory Stick and SD/MMC Memory Card
- Built-in 32 bytes FIFO buffers for transmit and receive, FIFO is shared for transmit and receive
- Built-in CRC circuit
- CRC generation can be disabled
- DMA supported
- Interrupt capabilities
- Automatic command execution capability when an interrupt from Memory Stick
- Data rate up to 26 Mbps in serial mode, 26x4 Mbps in parallel model, the module is targeted at 26 MHz operating clock
- Serial clock rate on MS/SD/MMC bus is programmable
- Card detection capabilities

- Controllability of power for memory card
- Not support SPI mode for MS/SD/MMC Memory Card
- Not support multiple SD Memory Cards

6.6.2 Overview

6.6.2.1 Pin Assignment

Since the controller only can be configured as either the host of Memory Stick or the host of SD/MMC Memory Card at one time, pins for Memory Stick and SD/MMC Memory Card are shared in order to save pin counts. The following lists pins required for Memory Stick and SD/MMC Memory Card. **Table 32** shows how they are shared. In **Table 32**, all I/O pads have embedded both of pull up and pull down resistor because they are shared by both of Memory Stick and SD/MMC Memory Card. Pins 2,4,5,8 are only useful for SD/MMC Memory Card. Pull down resistor for these pins can be used for power saving. All embedded pull-up and pull-down resistors can be disabled by programming the corresponding control registers if optimal pull-up or pull-down resistors are required on system board. The pin VDDPD is used for power saving. Power for Memory Stick or SD/MMC Memory Card can be shut down by programming corresponding the control register. The pin WP (Write Protection) is also only valid while the controller is for SD/MMC Memory Card. It is used to detect the status of Write Protection Switch on SD/MMC Memory Card. **Note the pin 3 of Memory Stick PRO**. If Memory Stick is desired on an application Memory Stick instead of Memory Stick PRO, then the pin 3 shall be tied to supply voltage.

No.	Name	Type	MMC	SD	MS	MSPRO	Description
1	SD_CLK	O	CLK	CLK	SCLK	SCLK	Clock
2	SD_DAT3	I/O/PP		CD/DAT3		DAT3	Data Line [Bit 3]
3	SD_DAT0	I/O/PP	DAT0	DAT0	SDIO	DAT0	Data Line [Bit 0]
4	SD_DAT1	I/O/PP		DAT1		DAT1	Data Line [Bit 1]
5	SD_DAT2	I/O/PP		DAT2		DAT2	Data Line [Bit 2]
6	SD_CMD	I/O/PP	CMD	CMD	BS	BS	Command Or Bus State
7	SD_PWRON	O					VDD ON/OFF
8	SD_WP	I					Write Protection Switch in SD
9	SD_INS	I	VSS2	VSS2	INS	INS	Card Detection

Table 32 Sharing of pins for Memory Stick and SD/MMC Memory Card Controller

6.6.2.2 Card Detection

For Memory Stick, the host or connector should provide a pull up resistor on the signal INS. Therefore, the signal INS will be logic high if no Memory Stick is on line. The scenario of card detection for Memory Stick is shown in **Figure 48**. Before Memory Stick is inserted or powered on, on host side SW1 shall be closed and SW2 shall be opened for card detection. It's the default setting when the controller is powered on. Upon insertion of Memory Stick, the signal INS will have a transition from high to low. Hereafter, if Memory Stick is removed then the signal INS will return to logic high. If card insertion is intended not to support, SW1 shall be opened and SW2 closed always.

For SD/MMC Memory Card, detection of card insertion/removal by hardware is also supported. Because a pull down resistor with about 470 KΩ resistance that is impractical to embed in an I/O pad is needed on the signal CD/DAT3 and it has to be capable of being connected or disconnected dynamically onto the signal CD during initialization period, an additional I/O pad named is needed to switch on/off the pull down resistor on the system board. The scenario of card detection for SD/MMC Memory Card is shown in **Figure 49**. Before SD/MMC Memory Card is inserted or powered on, on host side SW1 and SW2 shall be opened for card detection. Meanwhile, pull down resistor R_{CD} on system board shall attach onto the signal CD/DAT3 by the output signal RCDEN. In addition, SW3 on card is default to close. Upon insertion of

SD/MMC Memory Card, the signal CD/DAT3 will have a transition from low to high. Hereafter, if SD/MMC Memory Card is removed then the signal CD/DAT3will return to logic low. After card identification process, pull down resistor R_{CD} on system board shall disconnect with the signal CD/DAT3 and SW3 on card shall be opened for normal operation.

Since the scheme above needs a mechanical switch such as relay on system board, it is not enough ideal. Thus a dedicated pin "INS" is used to perform card insertion and removal for SD/MMC. The pin "INS" will connect to the pin "VSS2" of a SD/MMC connector. Then the scheme of card detection is the same as that for MS. It is shown in **Figure 48**.

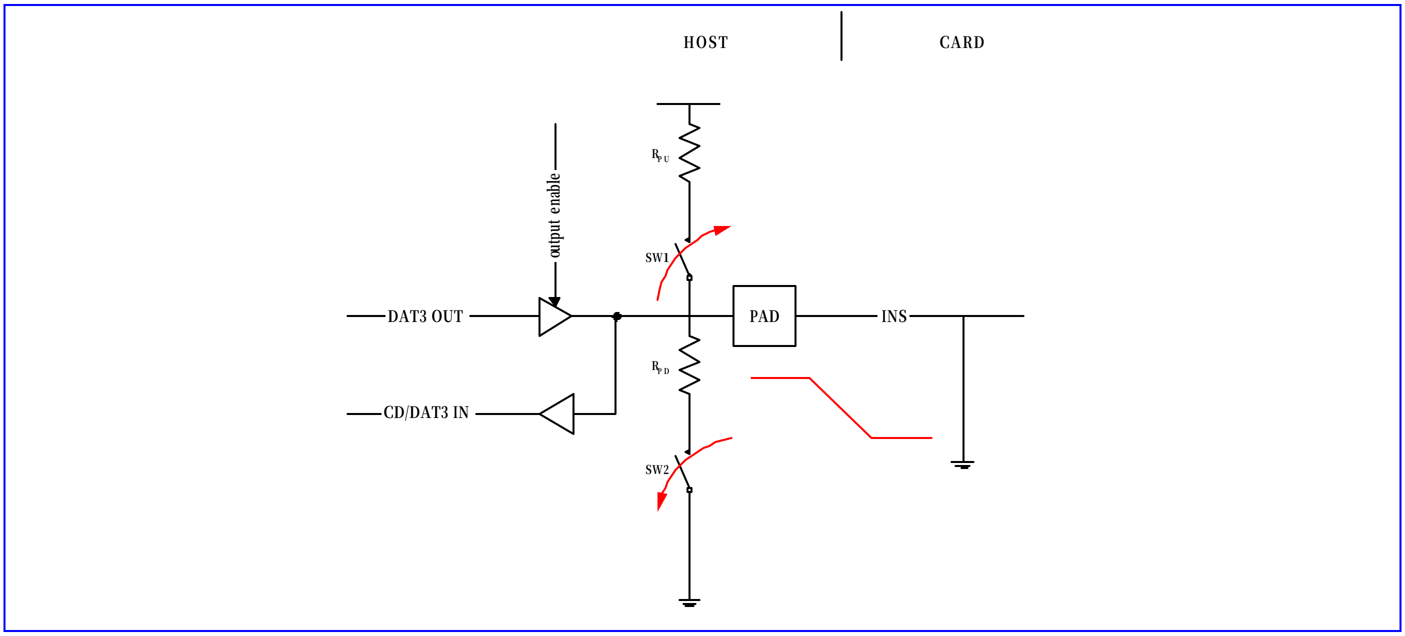

Figure 48 Card detection for Memory Stick

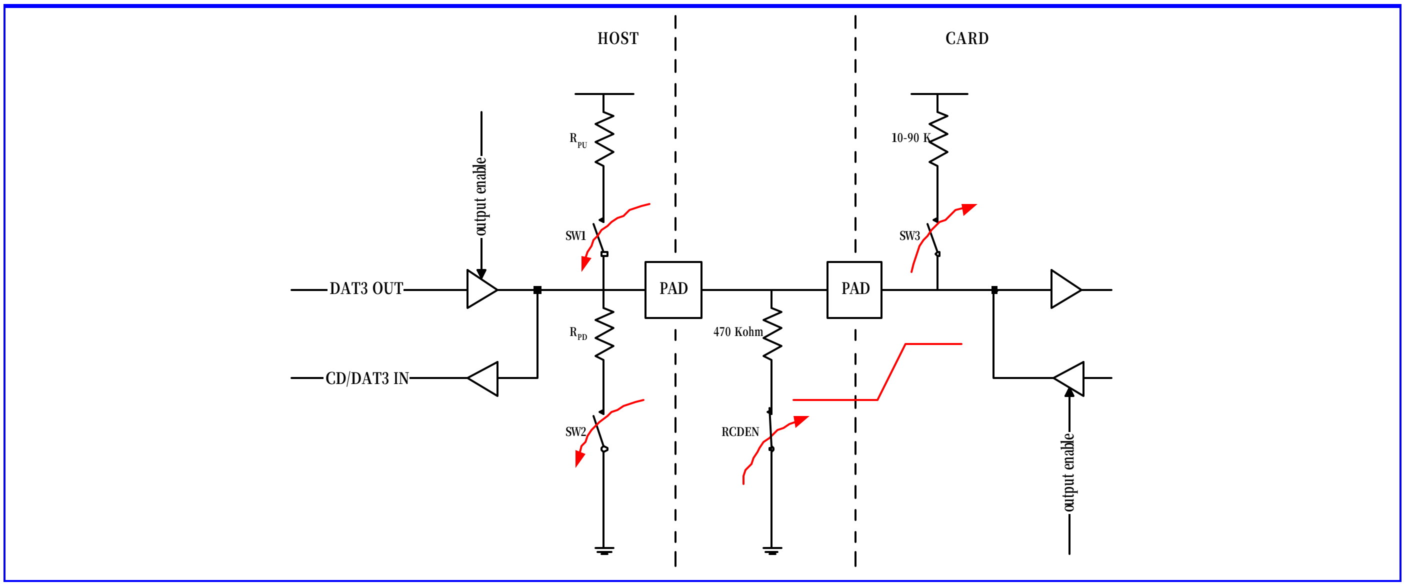

Figure 49 Card detection for SD/MMC Memory Card

MediaTek Inc. Confidential

6.6.3 Register Definitions

REGISTER ADDRESS	REGISTER NAME	SYNONYM
MSDC + 0000h	MS/SD Memory Card Controller Configuration Register	MSDC_CFG
MSDC + 0004h	MS/SD Memory Card Controller Status Register	MSDC_STA
MSDC + 0008h	MS/SD Memory Card Controller Interrupt Register	MSDC_INT
MSDC + 000Ch	MS/SD Memory Card Controller Data Register	MSDC_DAT
MSDC + 00010h	MS/SD Memory Card Pin Status Register	MSDC_PS
MSDC + 00014h	MS/SD Memory Card Controller IO Control Register	MSDC_IOCON
MSDC + 0020h	SD Memory Card Controller Configuration Register	SDC_CFG
MSDC + 0024h	SD Memory Card Controller Command Register	SDC_CMD
MSDC + 0028h	SD Memory Card Controller Argument Register	SDC_ARG
MSDC + 002Ch	SD Memory Card Controller Status Register	SDC_STA
MSDC + 0030h	SD Memory Card Controller Response Register 0	SDC_RESP0
MSDC + 0034h	SD Memory Card Controller Response Register 1	SDC_RESP1
MSDC + 0038h	SD Memory Card Controller Response Register 2	SDC_RESP2
MSDC + 003Ch	SD Memory Card Controller Response Register 3	SDC_RESP3
MSDC + 0040h	SD Memory Card Controller Command Status Register	SDC_CMDSTA
MSDC + 0044h	SD Memory Card Controller Data Status Register	SDC_DATSTA
MSDC + 0048h	SD Memory Card Status Register	SDC_CSTA
MSDC + 004Ch	SD Memory Card IRQ Mask Register 0	SDC_IRQMASK0
MSDC + 0050h	SD Memory Card IRQ Mask Register 1	SDC_IRQMASK1
MSDC + 0060h	Memory Stick Controller Configuration Register	MSC_CFG
MSDC + 0064h	Memory Stick Controller Command Register	MSC_CMD
MSDC + 0068h	Memory Stick Controller Auto Command Register	MSC_ACMD
MSDC + 006Ch	Memory Stick Controller Status Register	MSC_STA

Table 33 MS/SD Controller Register Map

6.6.3.1 Global Register Definitions

MSDC+0000h MS/SD Memory Card Controller Configuration Register MSDC_CFG

Bit	31	30	29	28	27	26	25	24	23	22	21	20	19	18	17	16
Name	FIFOTHD				PRCFG2		PRCFG1		PRCFG0		VDDPD	RCDEN	DIRQEN	PINEN	DMAEN	INTEN
Type	R/W				R/W		R/W		R/W		R/W	R/W	R/W	R/W	R/W	R/W
Reset	0001				01		01		01		0	0	0	0	0	0
Bit	15	14	13	12	11	10	9	8	7	6	5	4	3	2	1	0
Name	SCLKF								SCLKON	CRED	STDBY	CLKSRC	RST	NOCRC	RED	MSDC
Type	R/W								R/W	R/W	R/W	R/W	W	R/W	R/W	R/W
Reset	00000000								0	0	1	0	0	0	0	0

The register is for general configuration of the MS/SD controller. Note that MSDC_CFG[31:16] can be accessed by 16-bit APB bus access.

MSDC The register bit is used to configure the controller as the host of Memory Stick or as the host of SD/MMC Memory card. The default value is to configure the controller as the host of Memory Stick.

- **0** Configure the controller as the host of Memory Stick
- **1** Configure the controller as the host of SD/MMC Memory card

RED Rise Edge Data. The register bit is used to determine that serial data input is latched at the falling edge or the rising edge of serial clock. The default setting is at the rising edge. If serial data has worse timing, set the register bit to '1'. **When memory card has worse timing on return read data, set the register bit to '1'.**

- **0** Serial data input is latched at the rising edge of serial clock.
- **1** Serial data input is latched at the falling edge of serial clock.

NOCRC CRC Disable. A '1' indicates that data transfer without CRC is desired. For write data block, data will be transmitted without CRC. For read data block, CRC will not be checked. It is for testing purpose.

- **0** Data transfer with CRC is desired.
- **1** Data transfer without CRC is desired.

RST Software Reset. Writing a '1' to the register bit will cause internally synchronous reset of MS/SD controller, but not reset register setting.

- **0** Otherwise
- **1** Reset MS/SD controller

CLKSRC The register bit specifies which clock is used as source clock of memory card. If MUC clock is used, the fastest clock rate for memory card is 52/2=26MHz. If USB clock is used, the fastest clock rate for memory card is 48/2=24MHz.

- **0** Use MCU clock as source clock of memory card.
- **1** Use USB clock as source clock of memory card.

STDBY Standby Mode. If the module is powered down, operating clock to the module will be stopped. At the same time, clock to card detection circuitry also will be stopped. If detection of memory card insertion and removal is desired, write '1' to the register bit. Besides, if interrupt for detection of memory card insertion and removal is enabled, interrupt will take place whenever memory is inserted or removed.

- **0** Standby mode is disabled.
- **1** Standby mode is enabled.

CRED Card Rise Edge Data. The register bit is used to determine that serial data from memory card is output at the falling edge or the rising edge of serial clock. The default setting is at the falling edge.

- **0** Serial data is output at the falling edge of serial clock.
- **1** Serial data is output at the rising edge of serial clock.

SCLKON Serial Clock Always On. It is for debugging purpose.

- **0** Not to have serial clock always on.
- **1** To have serial clock always on.

SCLKF The register field controls clock frequency of serial clock on MS/SD bus. Denote clock frequency of MS/SD bus serial clock as f_{slave} and clock frequency of the MS/SD controller as f_{host} which is 52 or 26 MHz. Then the value of the register field is as follows. **Notes that the allowable maximum frequency of f_{slave} is 26MHz.**

- **00000000b** $f_{slave} = (1/2) * f_{host}$
- **00000001b** $f_{slave} = (1/4) * f_{host}$
- **00000010b** $f_{slave} = (1/8) * f_{host}$

00000011b $f_{slave} = (1/12)^* f_{host}$

…

00010000b $f_{slave} = (1/16*4)^* f_{host}$

…

11111111b $f_{slave} = (1/(255 * 4)) * f_{host}$

INTEN Interrupt Enable. Note that if interrupt capability is disabled then application software must poll the status of the register MSDC_STA for checking any interrupt request.

0 Interrupt induced by various conditions is disabled, no matter the controller is configured as the host of either SD/MMC Memory Card or Memory Stick.

1 Interrupt induced by various conditions is enabled, no matter the controller is configured as the host of either SD/MMC Memory Card or Memory Stick.

DMAEN DMA Enable. Note that if DMA capability is disabled then application software must poll the status of the register MSDC_STA for checking any data transfer request. If DMA is desired, the register bit must be set before command register is written.

0 DMA request induced by various conditions is disabled, no matter the controller is configured as the host of either SD/MMC Memory Card or Memory Stick.

1 DMA request induced by various conditions is enabled, no matter the controller is configured as the host of either SD/MMC Memory Card or Memory Stick.

PINEN Pin Interrupt Enable. The register bit is used to control if the pin for card detection is used as an interrupt source.

0 The pin for card detection is not used as an interrupt source.

1 The pin for card detection is used as an interrupt source.

DIRQEN Data Request Interrupt Enable. The register bit is used to control if data request is used as an interrupt source.

0 Data request is not used as an interrupt source.

1 Data request is used as an interrupt source.

RCDEN The register bit controls the output pin RCDEN that is used for card identification process when the controller is for SD/MMC Memory Card. Its output will control the pull down resistor on the system board to connect or disconnect with the signal CD/DAT3.

0 The output pin RCDEN will output logic low.

1 The output pin RCDEN will output logic high.

VDDPD The register bit controls the output pin VDDPD that is used for power saving. The output pin VDDPD will control power for memory card.

0 The output pin VDDPD will output logic low. The power for memory card will be turned off.

1 The output pin VDDPD will output logic high. The power for memory card will be turned on.

PRCFG0*[2] Pull Up/Down Register Configuration for the pin INS. The default value is 0b01.

00 Pull up resistor and pull down resistor in the I/O pad of the pin INS are all disabled.

01 Pull down resistor in the I/O pad of the pin INS is enabled.

10 Pull up resistor in the I/O pad of the pin INS is enabled.

11 Use keeper of IO pad.

PRCFG1 Pull Up/Down Register Configuration for the pin CMD/BS. The default value is 0b01.

00 Pull up resistor and pull down resistor in the I/O pad of the pin CMD/BS are all disabled.

01 Pull down resistor in the I/O pad of the pin CMD/BS is enabled.

---

[2] Pull up/down resitor for the pin INS is under control of GPIO setting instead of the register in MT6218B.

10 Pull up resistor in the I/O pad of the pin CMD/BS is enabled.

11 Use keeper of IO pad.

PRCFG2 Pull Up/Down Register Configuration for the pins DAT0, DAT1, DAT2, DAT3 and WP*[3]. The default value is 0b01.

00 Pull up resistor and pull down resistor in the I/O pads of the pins DAT0, DAT1, DAT2, DAT3 and WP. are all disabled.

01 Pull down resistor in the I/O pads of the pins DAT0, DAT1, DAT2, DAT3 and WP. is enabled.

10 Pull up resistor in the I/O pads of the pins DAT0, DAT1, DAT2, DAT3 and WP. is enabled.

11 Use keeper of IO pad.

FIFOTHD FIFO Threshold. The register field determines when to issue a DMA request. For write transactions, DMA requests will be asserted if the number of free entries in FIFO are larger than or equal to the value in the register field. For read transactions, DMA requests will be asserted if the number of valid entries in FIFO are larger than or equal to the value in the register field. The register field must be set according to the setting of data transfer count in DMA burst mode. If single mode for DMA transfer is used, the register field shall be set to 0b0001.

0000 Invalid.

0001 Threshold value is 1.

0010 Threshold value is 2.

...

1000 Threshold value is 8.

others Invalid

MSDC+0004h MS/SD Memory Card Controller Status Register MSDC_STA

Bit	15	14	13	12	11	10	9	8	7	6	5	4	3	2	1	0
Name	BUSY	FIFOCLR							FIFOCNT				INT	DRQ	BE	BF
Type	R	W							R				R	R	R	R
Reset	0	-							0000				0	0	0	0

The register contains the status of FIFO, interrupts and data requests.

BF The register bit indicates if FIFO in MS/SD controller is full.

0 FIFO in MS/SD controller is not full.

1 FIFO in MS/SD controller is full.

BE The register bit indicates if FIFO in MS/SD controller is empty.

0 FIFO in MS/SD controller is not empty.

1 FIFO in MS/SD controller is empty.

DRQ The register bit indicates if any data transfer is required. While any data transfer is required, the register bit still will be active even if the register bit DIRQEN in the register MSDC_CFG is disabled. Data transfer can be achieved by DMA channel alleviating MCU loading, or by polling the register bit to check if any data transfer is requested. While the register bit DIRQEN in the register MSDC_CFG is disabled, the second method is used.

0 No DMA request exists.

1 DMA request exists.

[3] Pull up/down resitor for the pin WP is under control of GPIO settting instead of the register in MT6218B.

INT The register bit indicates if any interrupt exists. While any interrupt exists, the register bit still will be active even if the register bit INTEN in the register MSDC_CFG is disabled. MS/SD controller can interrupt MCU by issuing interrupt request to Interrupt Controller, or software/application polls the register endlessly to check if any interrupt request exists in MS/SD controller. While the register bit INTEN in the register MSDC_CFG is disabled, the second method is used. For read commands, it is possible that timeout error takes place. Software can read the status register to check if timeout error takes place without OS time tick support or data request is asserted. Note that the register bit will be cleared when reading the register MSDC_INT.

- **0** No interrupt request exists.
- **1** Interrupt request exists.

FIFOCNT FIFO Count. The register field shows how many valid entries are in FIFO.

- **0000** There is 0 valid entry in FIFO.
- **0001** There is 1 valid entry in FIFO.
- **0010** There are 2 valid entries in FIFO.
- **…**
- **1000** There are 8 valid entries in FIFO.
- **others** Invalid

FIFOCLR Clear FIFO. Writing '1' to the register bit will cause the content of FIFO clear and reset the status of FIFO controller.

- **0** No effect on FIFO.
- **1** Clear the content of FIFO clear and reset the status of FIFO controller.

BUSY Status of the controller. If the controller is in busy state, the register bit will be '1'. Otherwise '0'.

- **0** The controller is in busy state.
- **1** The controller is in idle state.

MSDC+0008h MS/SD Memory Card Controller Interrupt Register MSDC_INT

Bit	15	14	13	12	11	10	9	8	7	6	5	4	3	2	1	0
Name										SDR1BIRQ	MSIFIRQ	SDMCIRQ	SDDATIRQ	SDCMDIRQ	PINIRQ	DIRQ
Type										RC	RC	RC	RC	RC	RC	RC
Reset										0	0	0	0	0	0	0

The register contains the status of interrupts. Note that the register still show status of interrupt even though interrupt is disabled, that is, the register bit INTEN of the register MSDC_CFG is set to '0. It implies that software interrupt can be implemented by polling the register bit INT of the register MSDC_STA and the very register. **However, if hardware interrupt is desired, remember to clear the register before setting the register bit INTEN of the register MSDC_CFG to '1'. Or undesired hardware interrupt arisen from previous interrupt status may take place.**

DIRQ Data Request Interrupt. The register bit indicates if any interrupt for data request exists. Whenever data request exists and data request as an interrupt source is enabled, i.e., the register bit DIRQEN in the register MSDC_CFG is set to '1', the register bit will be active. It will be reset when reading it. For software, data requests can be recognized by polling the register bit DRQ or by data request interrupt. Data request interrupts will be generated every FIFOTHD data transfers.

- **0** No Data Request Interrupt.
- **1** Data Request Interrupt occurs.

PINIRQ Pin Change Interrupt. The register bit indicates if any interrupt for memory card insertion/removal exists. Whenever memory card is inserted or removed and card detection interrupt is enabled, i.e., the register bit PINEN in the register MSDC_CFG is set to ‘1’, the register bit will be set to ‘1’. It will be reset when reading it.

- **0** Otherwise.
- **1** Card is inserted or removed.

SDCMDIRQ SD Bus CMD Interrupt. The register bit indicates if any interrupt for SD CMD line exists. Whenever interrupt for SD CMD line exists, i.e., any bit in the register SDC_CMDSTA is active, the register bit will be set to ‘1’ if interrupt is enabled. It will be reset when reading it.

- **0** No SD CMD line interrupt.
- **1** SD CMD line interrupt exists.

SDDATIRQ SD Bus DAT Interrupt. The register bit indicates if any interrupt for SD DAT line exists. Whenever interrupt for SD DAT line exists, i.e., any bit in the register SDC_ DATSTA is active, the register bit will be set to ‘1’ if interrupt is enabled. It will be reset when reading it.

- **0** No SD DAT line interrupt.
- **1** SD DAT line interrupt exists.

SDMCIRQ SD Memory Card Interrupt. The register bit indicates if any interrupt for SD Memory Card exists. Whenever interrupt for SD Memory Card exists, i.e., any bit in the register SDC_CSTA is active, the register bit will be set to ‘1’ if interrupt is enabled. It will be reset when reading it.

- **0** No SD Memory Card interrupt.
- **1** SD Memory Card interrupt exists.

MSIFIRQ MS Bus Interface Interrupt. The register bit indicates if any interrupt for MS Bus Interface exists. Whenever interrupt for MS Bus Interface exists, i.e., any bit in the register MSC_STA is active, the register bit will be set to ‘1’ if interrupt is enabled. It will be reset when reading the register MSDC_STA or MSC_STA.

- **0** No MS Bus Interface interrupt.
- **1** MS Bus Interface interrupt exists.

SDR1BIRQ SD/MMC R1b Response Interrupt. The register bit will be active when a SD/MMC command with R1b response finishes and the DAT0 line has transition from busy to idle state.

- **0** No interrupt for SD/MMC R1b response.
- **1** Interrupt for SD/MMC R1b response exists.

MSDC+000Ch MS/SD Memory Card Controller Data Register MSDC_DAT

Bit	31	30	29	28	27	26	25	24	23	22	21	20	19	18	17	16
Name	DATA[31:16]															
Type	R/W															
Bit	15	14	13	12	11	10	9	8	7	6	5	4	3	2	1	0
Name	DATA[15:0]															
Type	R/W															

The register is used to read/write data from/to FIFO inside MS/SD controller. Data access is in unit of 32 bits.

MSDC+0010h MS/SD Memory Card Pin Status Register MSDC_PS

Bit	15	14	13	12	11	10	9	8	7	6	5	4	3	2	1	0
Name												PINCHG	PIN0	POEN0	PIEN0	CDEN
Type												RC	R	R/W	R/W	R/W
Reset												0	0	0	0	0

The register is used for card detection. Remember that even memory card controller is powered on, that is, system is powered on, power for memory card is still off. Meanwhile, pad for card detection is default pull down as system is powered on. The scheme of card detection for MS is the same as that for SD/MMC.

For detecting card insertion, first pull up INS pin, then enable card detection and input pin at the same time. After 32 cycles of controller clock, status of whether pin changes will emerge. For detecting card removal, just keep enabling card detection and input pin.

CDEN Card Detection Enable. The register bit is used to enable or disable card detection.

- **0** Card detection is disabled.
- **1** Card detection is enabled.

PIEN0 The register bit is used to control input pin for card detection.

- **0** Input pin for card detection is disabled.
- **1** Input pin for card detection is enabled.

POEN0 The register bit is used to control output of input pin for card detection.

- **0** Output of input pin for card detection is disabled.
- **1** Output of input pin for card detection is enabled.

PIN0 The register shows the value of input pin for card detection.

- **0** The value of input pin for card detection is logic low.
- **1** The value of input pin for card detection is logic high.

PINCHG Pin Change. The register bit indicates the status of card insertion/removal. If memory card is inserted or removed, the register bit will be set to '1' no matter pin change interrupt is enabled or not. It will be cleared when reading the register.

- **0** Otherwise.
- **1** Card is inserted or removed.

MSDC+0014h MS/SD Memory Card Controller IO Control Register MSDC_IOCON

Bit	15	14	13	12	11	10	9	8	7	6	5	4	3	2	1	0
Name									SRCFG1	SRCFG0	ODCCFG1			ODCCFG0		
Type									R/W	R/W	R/W			R/W		
Reset									1	1	000			011		

The register specifies **Output Driving Capability** and **Slew Rate** of IO pads for MSDC. The reset value is suggestion setting. If output driving capability of the pins DAT0, DAT1, DAT2 and DAT3 is too large, it's possible to arise ground bounce and thus result in glitch on SCLK.

ODCCFG0 Output driving capability the pins CMD/BS and SCLK

- **000** 2mA
- **001** 4mA
- **010** 6mA
- **011** 8mA
- **100** 10mA
- **101** 12mA
- **110** 14mA
- **111** 16mA

ODCCFG1 Output driving capability the pins DAT0, DAT1, DAT2 and DAT3

000 2mA
001 4mA
010 6mA
011 8mA
100 10mA
101 12mA
110 14mA
111 16mA

SRCFG0 Output driving capability the pins CMD/BS and SCLK
0 Fast Slew Rate
1 Slow Slew Rate

SRCFG1 Output driving capability the pins DAT0, DAT1, DAT2 and DAT3
0 Fast Slew Rate
1 Slow Slew Rate

6.6.3.2 SD Memory Card Controller Register Definitions

MSDC+0020h SD Memory Card Controller Configuration Register SDC_CFG

Bit	31	30	29	28	27	26	25	24	23	22	21	20	19	18	17	16
Name	DTOC								WDOD						MDLEN	SIEN
Type	R/W								R/W						R/W	R/W
Reset	00000000								0000						0	0
Bit	15	14	13	12	11	10	9	8	7	6	5	4	3	2	1	0
Name	BSYDLY				BLKLEN											
Type	R/W				R/W											
Reset	1000				00000000000											

The register is used for configuring the MS/SD Memory Card Controller when it is configured as the host of SD Memory Card. If the controller is configured as the host of Memory Stick, the contents of the register have no impact on the operation of the controller. Note that SDC_CFG[31:16] can be accessed by 16-bit APB bus access.

BLKLEN It refers to Block Length. The register field is used to define the length of one block in unit of byte in a data transaction. The maximal value of block length is 2048 bytes.

000000000000 Reserved.
000000000001 Block length is 1 bytes
000000000010 Block length is 2 bytes.
…
011111111111 Block length is 2047 bytes.
100000000000 Block length is 2048 bytes.

BSYDLY The register field is only valid for the commands with R1b response. If the command has a response of R1b type, MS/SD controller must monitor the data line 0 for card busy status from the bit time that is two serial clock cycles after the command end bit to check if operations in SD/MMC Memory Card finish. The register field is used to expand the period between the command end bit and the bit time stopping to detect card busy status. If time is up and no card busy status on data line 0, then the controller will abandon the detection.

0000 No extend.
0001 Extend one more serial clock cycle.

MediaTek Inc. Confidential

0010 Extend two more serial clock cycles.

…

1111 Extend fifteen more serial clock cycle.

SIEN Serial Interface Enable. It should be enabled as soon as possible before any command.

0 Serial interface for SD/MMC is disabled.

1 Serial interface for SD/MMC is enabled.

MDLEN Multiple Data Line Enable. The register can be enabled only when SD Memory Card is applied and detected by software application. It is responsibility of application to program the bit correctly when an MultiMediaCard is applied. If an MultiMediaCard is applied and 4-bit data line is enabled, then 4 bits will be output every serial clock. Therefore, data integrity will fail.

0 4-bit Data line is disabled.

1 4-bit Data line is enabled.

WDOD Write Data Output Delay. The period from finish of the response for the initial host write command or the last write data block in a multiple block write operation to the start bit of the next write data block is required at least two serial clock cycles. The register field is used to extend the period (Write Data Output Delay) in unit of one serial clock.

0000 No extend.

0001 Extend one more serial clock cycle.

0010 Extend two more serial clock cycles.

…

1111 Extend fifteen more serial clock cycle.

DTOC Data Timeout Counter. The period from finish of the initial host read command or the last read data block in a multiple block read operation to the start bit of the next read data block is required at least two serial clock cycles. The counter is used to extend the period (Read Data Access Time) in unit of 65,536 serial clock. See the register field description of the register bit RDINT for reference.

00000000 Extend 65,536 more serial clock cycle.

00000001 Extend 65,536x2 more serial clock cycle.

00000010 Extend 65,536x3 more serial clock cycle.

…

11111111 Extend 65,536x 256 more serial clock cycle.

MSDC+0024h SD Memory Card Controller Command Register SDC_CMD

Bit	15	14	13	12	11	10	9	8	7	6	5	4	3	2	1	0
Name	INTC	STOP	RW	DTYPE		IDRT	RSPTYP			BREAK	CMD					
Type	R/W	R/W	R/W	R/W		R/W	R/W			R/W	R/W					
Reset	0	0	0	00		0	000			0	000000					

The register defines a SD Memory Card command and its attribute. Before MS/SD controller issues a transaction onto SD bus, application shall specify other relative setting such as argument for command. After application writes the register, MS/SD controller will issues the corresponding transaction onto SD serial bus. If the command is GO_IDLE_STATE, the controller will have serial clock on SD/MMC bus run 128 cycles before issuing the command.

CMD SD Memory Card command. It is totally 6 bits.

BREAK Abort a pending MMC GO_IRQ_MODE command. It is only valid for a pending GO_IRQ_MODE command waiting for MMC interrupt response.

0 Other fields are valid.

1 Break a pending MMC GO_IRQ_MODE command in the controller. Other fields are invalid.

RSPTYP The register field defines response type for the command. For commands with R1 and R1b response, the register SDC_CSTA (not SDC_STA) will update after response token is received. This register SDC_CSTA contains the status of the SD/MMC and it will be used as response interrupt sources. Note that if CMD7 is used with all 0's RCA then RSPTYP must be "000". And the command "GO_TO_IDLE" also have RSPTYP='000'.

000 There is no response for the command. For instance, broadcast command without response and GO_INACTIVE_STATE command.

001 The command has R1 response. R1 response token is 48-bit.

010 The command has R2 response. R2 response token is 136-bit.

011 The command has R3 response. Even though R3 is 48-bit response, but it does not contain CRC checksum.

100 The command has R4 response. R4 response token is 48-bit. (Only for MMC)

101 The command has R5 response. R5 response token is 48-bit. (Only for MMC)

110 The command has R6 response. R6 response token is 48-bit.

111 The command has R1b response. If the command has a response of R1b type, MS/SD controller must monitor the data line 0 for card busy status from the bit time that is two or four serial clock cycles after the command end bit to check if operations in SD/MMC Memory Card finish. There are two cases for detection of card busy status. The first case is that the host stops the data transmission during an active write data transfer. The card will assert busy signal after the stop transmission command end bit followed by four serial clock cycles. The second case is that the card is in idle state or under a scenario of receiving a stop transmission command between data blocks when multiple block write command is in progress. The register bit is valid only when the command has a response token.

IDRT Identification Response Time. The register bit indicates if the command has a response with N_{ID} (that is, 5 serial clock cycles as defined in SD Memory Card Specification Part 1 Physical Layer Specification version 1.0) response time. The register bit is valid only when the command has a response token. Thus the register bit must be set to '1' for CMD2 (ALL_SEND_CID) and ACMD41 (SD_APP_OP_CMD).

0 Otherwise.

1 The command has a response with N_{ID} response time.

DTYPE The register field defines data token type for the command.

00 No data token for the command

01 Single block transaction

10 Multiple block transaction. That is, the command is a multiple block read or write command.

11 Stream operation. It only shall be used when an MultiMediaCard is applied.

RW The register bit defines the command is a read command or write command. The register bit is valid only when the command will cause a transaction with data token.

0 The command is a read command.

1 The command is a write command.

STOP The register bit indicates if the command is a stop transmission command.

0 The command is not a stop transmission command.

1 The command is a stop transmission command.

INTR The register bit indicates if the command is GO_IRQ_STATE. If the command is GO_IRQ_STATE, the period between command token and response token will not be limited.

0 The command is not GO_IRQ_STATE.

1 The command is GO_IRQ_STATE.

MSDC+0028h SD Memory Card Controller Argument Register SDC_ARG

Bit	31	30	29	28	27	26	25	24	23	22	21	20	19	18	17	16
Name	ARG [31:16]															
Type	R/W															
Bit	15	14	13	12	11	10	9	8	7	6	5	4	3	2	1	0
Name	ARG [15:0]															
Type	R/W															

The register contains the argument of the SD/MMC Memory Card command.

MSDC+002Ch SD Memory Card Controller Status Register SDC_STA

Bit	15	14	13	12	11	10	9	8	7	6	5	4	3	2	1	0
Name	WP											R1BSY	RSV	DATBUSY	CMDBUSY	SDCBUSY
Type	R											R	R	R	R	R
Reset	-											0	0	0	0	0

The register contains various status of MS/SD controller as the controller is configured as the host of SD Memory Card.

SDCBUSY The register field indicates if MS/SD controller is busy, that is, any transmission is going on CMD or DAT line on SD bus.

0 MS/SD controller is idle.

1 MS/SD controller is busy.

CMDBUSY The register field indicates if any transmission is going on CMD line one SD bus.

0 No transmission is going on CMD line on SD bus.

1 There exists transmission going on CMD line on SD bus.

DATBUSY The register field indicates if any transmission is going on DAT line one SD bus. **For those command without data butstil involved DAT line, the register bit is useless. For example, if an Erase command is issued, then checking if the register bit is '0' before issuing next command with data would not guarantee the controller is idle. Under the situation, use the register bit SDCBUSY.**

0 No transmission is going on DAT line on SD bus.

1 There exists transmission going on DAT line on SD bus.

R1BSY The register field shows the status of DAT line 0 for commands with R1b response.

0 SD/MMC Memory card is not busy.

1 SD/MMC Memory card is busy.

WP It is used to detect the status of Write Protection Switch on SD Memory Card. The register bit shows the status of Write Protection Switch on SD Memory Card. No reset value. The pin WP (Write Protection) is also only useful while the controller is for SD Memory Card.

1 Write Protection Switch ON. It means that memory card is desired to be write-protected.

0 Write Protection Switch OFF. It means that memory card is writable.

MSDC+0030h SD Memory Card Controller Response Register 0 SDC_RESP0

Bit	31	30	29	28	27	26	25	24	23	22	21	20	19	18	17	16
Name	RESP [31:16]															
Type	R															
Bit	15	14	13	12	11	10	9	8	7	6	5	4	3	2	1	0
Name	RESP [15:0]															
Type	R															

The register contains partial of the last SD/MMC Memory Card bus response. See description for the register field SDC_RESP3.

MSDC+0034h SD Memory Card Controller Response Register 1 SDC_RESP1

Bit	31	30	29	28	27	26	25	24	23	22	21	20	19	18	17	16
Name	RESP [63:48]															
Type	R															
Bit	15	14	13	12	11	10	9	8	7	6	5	4	3	2	1	0
Name	RESP [47:32]															
Type	R															

The register contains partial of the last SD/MMC Memory Card bus response. See description for the register field SDC_RESP3.

MSDC+0038h SD Memory Card Controller Response Register 2 SDC_RESP2

Bit	31	30	29	28	27	26	25	24	23	22	21	20	19	18	17	16
Name	RESP [95:80]															
Type	R															
Bit	15	14	13	12	11	10	9	8	7	6	5	4	3	2	1	0
Name	RESP [79:64]															
Type	R															

The register contains partial of the last SD/MMC Memory Card bus response. See description for the register field SDC_RESP3.

MSDC+003Ch SD Memory Card Controller Response Register 3 SDC_RESP3

Bit	31	30	29	28	27	26	25	24	23	22	21	20	19	18	17	16
Name	RESP [127:112]															
Type	R															
Bit	15	14	13	12	11	10	9	8	7	6	5	4	3	2	1	0
Name	RESP [111:96]															
Type	R															

The register contains partial of the last SD/MMC Memory Card bus response. The register fields SDC_RESP0, SDC_RESP1, SDC_RESP2 and SDC_RESP3 compose the last SD/MMC Memory card bus response. For response of type R2, that is, response of the command ALL_SEND_CID, SEND_CSD and SEND_CID, only bit 127 to 0 of response token is stored in the register field SDC_RESP0, SDC_RESP1, SDC_RESP2 and SDC_RESP3. For response of other types, only bit 39 to 8 of response token is stored in the register field SDC_RESP0.

MSDC+0040h SD Memory Card Controller Command Status Register SDC_CMDSTA

Bit	15	14	13	12	11	10	9	8	7	6	5	4	3	2	1	0
Name													MMCIRQ	RSPCRCERR	CMDTO	CMDRDY
Type													RC	RC	RC	RC
Reset													0	0	0	0

The register contains the status of MS/SD controller during command execution and that of MS/SD bus protocol after command execution when MS/SD controller is configured as the host of SD/MMC Memory Card. The register also will be

used as interrupt sources. The register will be cleared when reading the register. Meanwhile, if interrupt is enabled and thus interrupt caused by the register is generated, reading the register will have interrupt deasserted.

CMDRDY For command without response, the register bit will be '1' once the command completes on SD/MMC bus. For command with response, the register bit will be '1' whenever the command is issued onto SD/MMC bus and its corresponding response is received **without CRC error**.

- **0** Otherwise.
- **1** Command with/without response finish successfully without CRC error.

CMDTO Timeout on CMD detected. A '1' indicates that MS/SD controller detected a timeout condition while waiting for a response on the CMD line.

- **0** Otherwise.
- **1** MS/SD controller detected a timeout condition while waiting for a response on the CMD line.

RSPCRCERR CRC error on CMD detected. A '1' indicates that MS/SD controller detected a CRC error **after reading a response from the CMD line.**

- **0** Otherwise.
- **1** MS/SD controller detected a CRC error after reading a response from the CMD line.

MMCIRQ MMC requests an interrupt. A '1' indicates that a MMC supporting command class 9 issued an interrupt request.

- **0** Otherwise.
- **1** A '1' indicates that a MMC supporting command class 9 issued an interrupt request.

MSDC+0044h SD Memory Card Controller Data Status Register SDC_DATSTA

Bit	15	14	13	12	11	10	9	8	7	6	5	4	3	2	1	0
Name														DATCRCERR	DATTO	BLKDONE
Type														RC	RC	RC
Reset														0	0	0

The register contains the status of MS/SD controller during data transfer on DAT line(s) when MS/SD controller is configured as the host of SD/MMC Memory Card. The register also will be used as interrupt sources. The register will be cleared when reading the register. Meanwhile, if interrupt is enabled and thus interrupt caused by the register is generated, reading the register will have interrupt deasserted.

BLKDONE The register bit indicates the status of data block transfer.

- **0** Otherwise.
- **1** A data block was successfully transferred.

DATTO Timeout on DAT detected. A '1' indicates that MS/SD controller detected a timeout condition while waiting for data token on the DAT line.

- **0** Otherwise.
- **1** MS/SD controller detected a timeout condition while waiting for data token on the DAT line.

DATCRCERR CRC error on DAT detected. A '1' indicates that MS/SD controller detected a CRC error after reading a block of data from the DAT line or SD/MMC signaled a CRC error after writing a block of data to the DAT line.

- **0** Otherwise.
- **1** MS/SD controller detected a CRC error after reading a block of data from the DAT line or SD/MMC signaled a CRC error after writing a block of data to the DAT line.

MSDC+0048h SD Memory Card Status Register SDC_CSTA

Bit	31	30	29	28	27	26	25	24	23	22	21	20	19	18	17	16
Name	CSTA[31:16]															
Type	RC															
Reset	0000000000000000															
Bit	15	14	13	12	11	10	9	8	7	6	5	4	3	2	1	0
Name	CSTA [15:0]															
Type	RC															
Reset	0000000000000000															

After commands with R1 and R1b response this register contains the status of the SD/MMC card and it will be used as response interrupt sources. In all register fields, logic high indicates error and logic low indicates no error. The register will be cleared when reading the register. Meanwhile, if interrupt is enabled and thus interrupt caused by the register is generated, reading the register will have interrupt deasserted.

CSTA31 **OUT_OF_RANGE**. The command's argument was out of the allowed range for this card.

CSTA30 **ADDRESS_ERROR**. A misaligned address which did not match the block length was used in the command.

CSTA29 **BLOCK_LEN_ERROR**. The transferred block length is not allowed for this card, or the number of transferred bytes does not match the block length.

CSTA28 **ERASE_SEQ_ERROR**. An error in the sequence of erase commands occurred.

CSTA27 **ERASE_PARAM**. An invalid selection of write-blocks for erase occurred.

CSTA26 **WP_VIOLATION**. Attempt to program a write-protected block.

CSTA25 Reserved. Return zero.

CSTA24 **LOCK_UNLOCK_FAILED**. Set when a sequence or password error has been detected in lock/unlock card command or if there was an attempt to access a locked card.

CSTA23 **COM_CRC_ERROR**. The CRC check of the previous command failed.

CSTA22 **ILLEGAL_COMMAND**. Command not legal for the card state.

CSTA21 **CARD_ECC_FAILED**. Card internal ECC was applied but failed to correct the data.

CSTA20 **CC_ERROR**. Internal card controller error.

CSTA19 **ERROR**. A general or an unknown error occurred during the operation.

CSTA18 **UNDERRUN**. The card could not sustain data transfer in stream read mode.

CSTA17 **OVERRUN**. The card could not sustain data programming in stream write mode.

CSTA16 **CID/CSD_OVERWRITE**. It can be either one of the following errors: 1. The CID register has been already written and cannot be overwritten 2. The read only section of the CSD does not match the card. 3. An attempt to reverse the copy (set as original) or permanent WP (unprotected) bits was made.

CSTA[15:4] Reserved. Return zero.

CSTA3 **AKE_SEQ_ERROR**. Error in the sequence of authentication process

CSTA[2:0] Reserved. Return zero.

MSDC+004Ch SD Memory Card IRQ Mask Register 0 SDC_IRQMASK0

Bit	31	30	29	28	27	26	25	24	23	22	21	20	19	18	17	16
Name	IRQMASK [31:16]															
Type	R/W															
Reset	0000000000000000															
Bit	15	14	13	12	11	10	9	8	7	6	5	4	3	2	1	0
Name	IRQMASK [15:0]															
Type	R/W															
Reset	0000000000000000															

The register is partial of SD Memory Card Interrupt Mask Register. See the register description of the register SDC_IRQMASK1 for reference. The register will mask interrupt sources from the register SDC_CMDSTA and SDC_DATSTA. IRQMASK[15:0] is for SDC_CMDSTA and IRQMASK[31:16] for SDC_DATSTA. A '1' in some bit of the register will mask the corresponding interrupt source with the same bit position. For example, if IRQMASK[0] is '1' then interrupt source from the register field CMDRDY of the register SDC_ CMDSTA will be masked. A '0' in some bit will not cause interrupt mask on the corresponding interrupt source from the register SDC_CMDSTA and SDC_DATSTA.

MSDC+0050h SD Memory Card IRQ Mask Register 1 SDC_IRQMASK1

Bit	31	30	29	28	27	26	25	24	23	22	21	20	19	18	17	16
Name	IRQMASK [63:48]															
Type	R/W															
Reset	0000000000000000															
Bit	15	14	13	12	11	10	9	8	7	6	5	4	3	2	1	0
Name	IRQMASK [47:32]															
Type	R/W															
Reset	0000000000000000															

The register is partial of SD Memory Card Interrupt Mask Register. The registers SDC_IRQMASK1 and SDC_IRQMASK0 compose SD Memory Card Interrupt Mask Register. The register will mask interrupt sources from the register SDC_CSTA. A '1' in some bit of the register will mask the corresponding interrupt source with the same bit position. For example, if IRQMASK[63] is '1' then interrupt source from the register field OUT_OF_RANGE of the register SDC_ CSTA will be masked. A '0' in some bit will not cause interrupt mask on the corresponding interrupt source from the register SDC_ CSTA.

6.6.3.3 Memory Stick Controller Register Definitions

MSDC+0060h Memory Stick Controller Configuration Register MSC_CFG

Bit	15	14	13	12	11	10	9	8	7	6	5	4	3	2	1	0
Name	PMODE	PRED											BUSYCNT			SIEN
Type	R/W	R/W											R/W			R/W
Reset	0	0											101			0

The register is used for Memory Stick Controller Configuration when MS/SD controller is configured as the host of Memory Stick.

SIEN Serial Interface Enable. It should be enabled as soon as possible before any command.

- **0** Serial interface for Memory Stick is disabled.
- **1** Serial interface for Memory Stick is enabled.

BUSYCNT RDY timeout setting in unit of serial clock cycle. The register field is set to the maximum BUSY timeout time (set value x 4 +2) to wait until the RDY signal is output from the card. RDY timeout error detection is not performed when BUSYCNT is set to 0. The initial value is 0x5. That is, BUSY signal exceeding 5x4+2=22 serial clock cycles causes a RDY timeout error.

- **000** Not detect RDY timeout
- **001** BUSY signal exceeding 1x4+2=6 serial clock cycles causes a RDY timeout error.
- **010** BUSY signal exceeding 2x4+2=10 serial clock cycles causes a RDY timeout error.
- **…**

111 BUSY signal exceeding 7x4+2=30 serial clock cycles causes a RDY timeout error.

PRED Parallel Mode Rising Edge Data. The register field is only valid in parallel mode, that is, MSPRO model. In parallel mode, data must be driven and latched at the falling edge of serial clock on MS bus. In order to mitigate hold time issue, the register can be set to '1' such that write data is driven by MSDC at the rising edge of serial clock on MS bus.

- **0** Write data is driven by MSDC at the falling edge of serial clock on MS bus.
- **1** Write data is driven by MSDC at the rising edge of serial clock on MS bus.

PMODE Memory Stick PRO Mode.

- **0** Use Memory Stick serial mode.
- **1** Use Memory Stick parallel mode.

MSDC+0064h Memory Stick Controller Command Register MSC_CMD

Bit	15	14	13	12	11	10	9	8	7	6	5	4	3	2	1	0
Name	PID						DATASIZE									
Type	R/W						R/W									
Reset	0000						0000000000									

The register is used for issuing a transaction onto MS bus. Transaction on MS bus is started by writing to the register MSC_CMD. The direction of data transfer, that is, read or write transaction, is extracted from the register field PID. 16-bit CRC will be transferred for a write transaction even if the register field DATASIZE is programmed as zero under the condition which the register field NOCRC in the register MSDC_CFG is '0'. If the register field NOCRC in the register MSDC_CFG is '1' and the register field DATA SIZE is programmed as zero, then writing to the register MSC_CMD will not induce transaction on MS bus. It is the same case when the register field RDY in the register MSC_STA is '0'.

DATASIZE Data size in unit of byte for the current transaction.

- **0000000000** Data size is 0 byte.
- **0000000001** Data size is one byte.
- **0000000010** Data size is two bytes.
- **...**
- **0111111111** Data size is 511 bytes.
- **1000000000** Data size is 512 bytes.

PID Protocol ID. It is used to derive Transfer Protocol Code (TPC). The TPC can be derived by cascading PID and its reverse version. For example, if PID is 0x1, then TPC is 0x1e, that is, 0b0001 cascades 0b1110. In addition, the direction of the bus transaction can be determined from the register bit 15, that is, PID[3].

MSDC+0068h Memory Stick Controller Auto Command Register MSC_ACMD

Bit	15	14	13	12	11	10	9	8	7	6	5	4	3	2	1	0
Name	APID					ADATASIZE										ACEN
Type	R/W					R/W										R/W
Reset	0111					0000000001										0

The register is used for issuing a transaction onto MS bus automatically after the MS command defined in MSC_CMD completed on MS bus. Auto Command is a function used to automatically execute a command like GET_INT or READ_REG for checking status after SET_CMD ends. If auto command is enabled, the command set in the register will be executed once the INT signal on MS bus is detected. After auto command is issued onto MS bus, the register bit ACEN will become disabled automatically. Note that if auto command is enabled then the register bit RDY in the register MSC_STA

caused by the command defined in MSC_CMD will be suppressed until auto command complete. Note that the register field ADATASIZE cannot be set to zero, or the result is unpredictable.

ACEN Auto Command Enable.

- **0** Auto Command is disabled.
- **1** Auto Command is enabled.

ADATASIZE Data size in unit of byte for Auto Command. Initial value is 0x01.

- **0000000000** Data size is 0 byte.
- **0000000001** Data size is one byte.
- **0000000010** Data size is two bytes.
- **...**
- **0111111111** Data size is 511 bytes.
- **1000000000** Data size is 512 bytes.

APID Auto Command Protocol ID. It is used to derive Transfer Protocol Code (TPC). Initial value is GSET_INT(0x7).

MSDC+006Ch Memory Stick Controller Status Register MSC_STA

Bit	15	14	13	12	11	10	9	8	7	6	5	4	3	2	1	0
Name	CMDNK	BREQ	ERR	CED								HSRDY	CRCER	TOER	SIF	RDY
Type	R	R	R	R								R	R	R	R	R
Reset	0	0	0	0								0	0	0	0	1

The register contains various status of Memory Stick Controller, that is, MS/SD controller is configured as Memory Stick Controller. These statuses can be used as interrupt sources. Reading the register will NOT clear it. The register will be cleared whenever a new command is written to the register MSC_CMD.

RDY The register bit indicates the status of transaction on MS bus. The register bit will be cleared when writing to the command register MSC_CMD.

- **0** Otherwise.
- **1** A transaction on MS bus is ended.

SIF The register bit indicates the status of serial interface. If an interrupt is active on MS bus, the register bit will be active. Note the difference between the signal RDY and SIF. When parallel mode is enabled, the signal SIF will be active whenever any of the signal CED, ERR, BREQ and CMDNK is active. **In order to separate interrupts caused by the signals RDY and SIF, the register bit SIF will not become active until the register MSDC_INT is read once. That is, the sequence for detecting the register bit SIF by polling is as follows:**

1. Detect the register bit RDY of the register MSC_STA
2. Read the register MSDC_INT
3. Detect the register bit SIF of the register MSC_STA

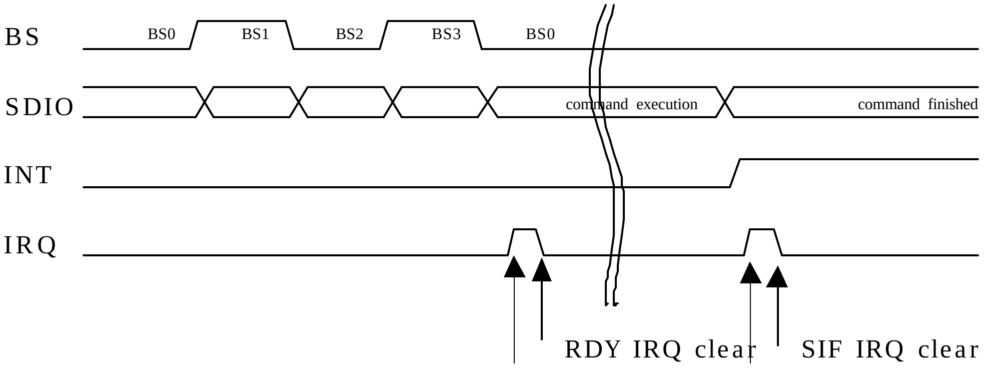

0 Otherwise.

1 An interrupt is active on MS bus

TOER The register bit indicates if a BUSY signal timeout error takes place. When timeout error occurs, the signal BS will become logic low ‘0’. The register bit will be cleared when writing to the command register MSC_CMD.

0 No timeout error.

1 A BUSY signal timeout error takes place. The register bit RDY will also be active.

CRCER The register bit indicates if a CRC error occurs while receiving read data. The register bit will be cleared when writing to the command register MSC_CMD.

0 Otherwise.

1 A CRC error occurs while receiving read data. The register bit RDY will also be active.

HSRDY The register bit indicates the status of handshaking on MS bus. The register bit will be cleared when writing to the command register MSC_CMD.

0 Otherwise.

1 A Memory Stick card responds to a TPC by RDY.

CED The register bit is only valid when parallel mode is enabled. In fact, it’s value is from DAT[0] when serial interface interrupt takes palce. See Format Specification version 2.0 of Memory Stick Standard (Memory Stick PRO) for details.

0 Command does not terminate.

1 Command terminates normally or abnormally.

ERR The register bit is only valid when parallel mode is enabled. In fact, it’s value is from DAT[1] when serial interface interrupt takes palce. See Format Specification version 2.0 of Memory Stick Standard (Memory Stick PRO) for details.

0 Otherwise.

1 Indicate memory access error during memory access command.

BREQ The register bit is only valid when parallel mode is enabled. In fact, it’s value is from DAT[2] when serial interface interrupt takes palce. See Format Specification version 2.0 of Memory Stick Standard (Memory Stick PRO) for details.

0 Otherwise.

1 Indicate request for data.

CMDNK The register bit is only valid when parallel mode is enabled. In fact, it’s value is from DAT[3] when serial interface interrupt takes palce. See Format Specification version 2.0 of Memory Stick Standard (Memory Stick PRO) for details.

0 Otherwise

1 Indicate non-recognized command.

6.6.4 Application Notes

6.6.4.1 Initialization Procedures After Power On

```
Disable power down control for MSDC module
```

Remember to power on MSDC module before any operation to it.

6.6.4.2 Card Detection Procedures

The pseudo code is as follows:

```
MSDC_CFG.PRCFG0 = 2'b10
MSDC_PS = 2'b11
MSDC_CFG.VDDPD = 1
if(MSDC_PS.PINCHG) { // card is inserted
    . . .
}
```

The pseudo code segment perform the following tasks:

1. First pull up CD/DAT3 (INS) pin.
2. Enable card detection and input pin at the same time.
3. Turn on power for memory card.
4. Detect insertion of memory card.

6.6.4.3 Notes on Commands

For MS, check if MSC_STA.RDY is '1' before issue any command.

For SD/MMC, if the command desired to issue involves data line, for example, commands with data transfer or R1b response, check if SDC_STA.SDCBUSY is '0' before issuing. If the command desired to issue does not involve data line, only check if SDC_STA.CMDBUSY is '0' before issuing.

6.6.4.4 Notes on Data Transfer

- For SD/MMC, if multiple-block-write command is issued then only issue STOP_TRANS command inter-blocks instead of intra-blocks.
- Once S/W decides to issue STOP_TRANS commands, not any more data transfer from or to the controller.

6.6.4.5 Notes on Frequency Change

Before changing frequency of serial clock on MS/SD/MMC bus, it is necessary to disable serial interface of the controller. That is, set the register bit SIEN of the register SDC_CFG to '0' for SD/MMC controller, and set the register bit SIEN of the register MSC_CFG to '0' for Memory Stick controller. Of course, enable serial interface of the controller before any operation to memory card.

6.6.4.6 Notes on Response Timeout

If a read command doest not get response, that is, terminates with timeout, remember to clear the register SDC_DATSTA by reading it. The register bit "DATTO" should be active. However, it may take long time to wait the register bit being active.

The alternative is to send the STOP_TRANS command. Of course the method will get response with illegal-command information. Besides, remember to check if the register bit SDC_STA.CMDBUSY is active before issuing the STOP_TRANS command. The procedure is as follows:

1. Read command => response time out
2. Issue STOP_TRANS command => Get Response
3. Read register SDC_DATSTA to clear it

6.6.4.7 Source or Destination Address is not word-aligned

It's possible that source address is not word-aligned when data movement from memory to MSDC. Similarly, destination address may be not word-aligned when data movement from MSDC to memory. You can solve it by setting DMA byte-to-word functionality.

1. DMAn_CON.SIZE=0
2. DMAn_CON.BTW=1
3. DMAn_CON.BURST=2
4. DMAn_COUNT=byte number instead of word number

Note n=4 ~ 11

6.6.4.8 Some experiences

- Siemens MMC card: When a write command is issued and followed by a STOP_TRANS command, Siemens MMC card will de-assert busy status even though flash programming doesn't finish. Software must use "Get Status" command to make sure that flash programming finishes.

7 Audio Front-end

7.1 General Description

The audio front-end essentially comprises voice and audio data paths. **Figure 50** shows the block diagram of audio front-end. The whole voice band data paths are complied with GSM 03.50 specification. Furthermore, Mono hands-free audio or external FM radio playback path are provided. The audio stereo audio path facilitates audio quality playback, external FM radio, and voice playback through headset.

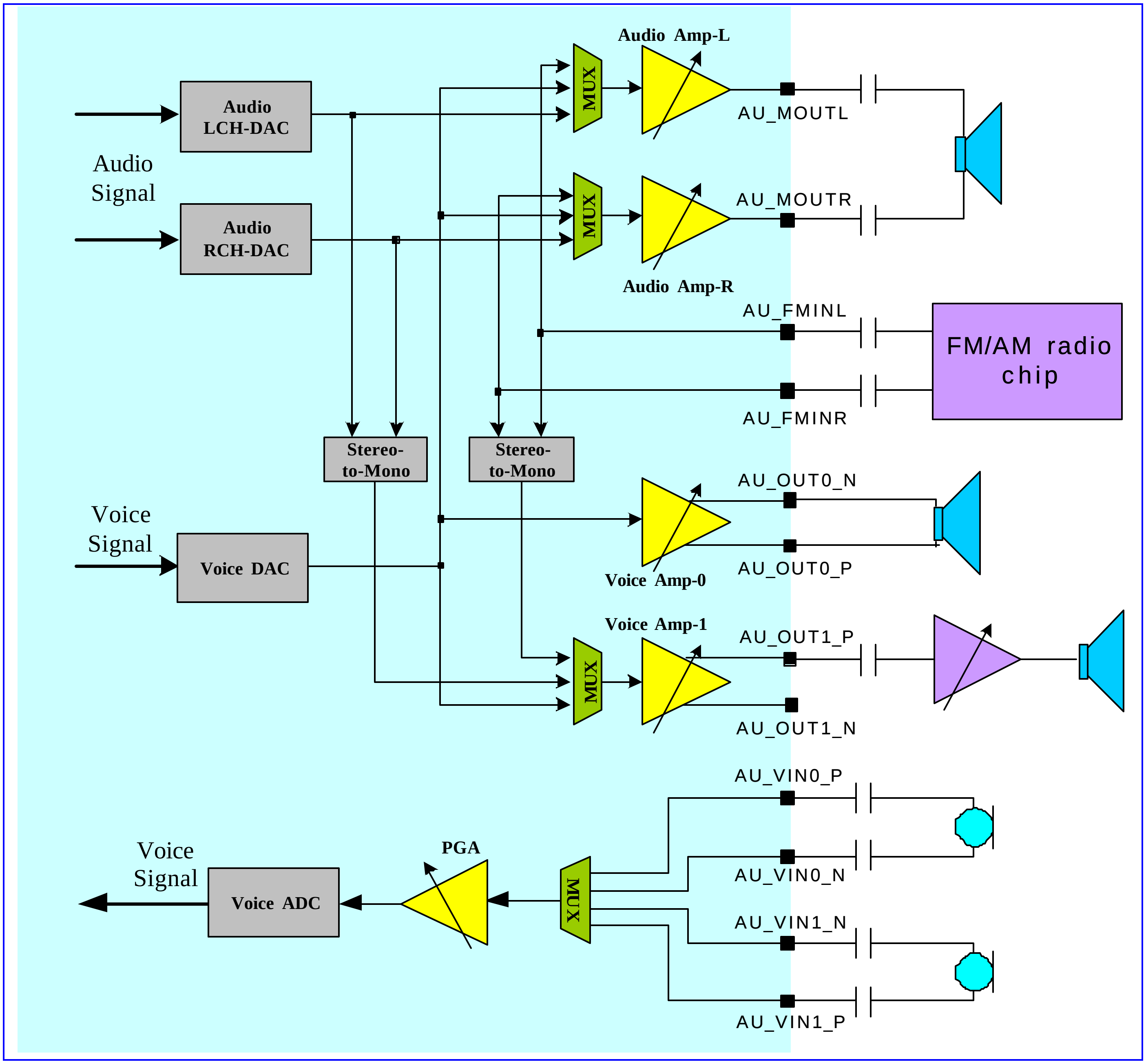

Figure 50 Block diagram of audio front-end

Figure 51 shows the block diagram of digital circuits of the audio front-end. The APB register block is an APB peripheral to get settings from the MCU. The DSP audio port block interfaces with the DSP for control and data communications. Besides, there is a Digital Audio Interface (DAI) block to communicate with the System Simulator for FTA or external Bluetooth module for particular applications. The digital filter block performs filter operations for voice band and audio band signal processing.

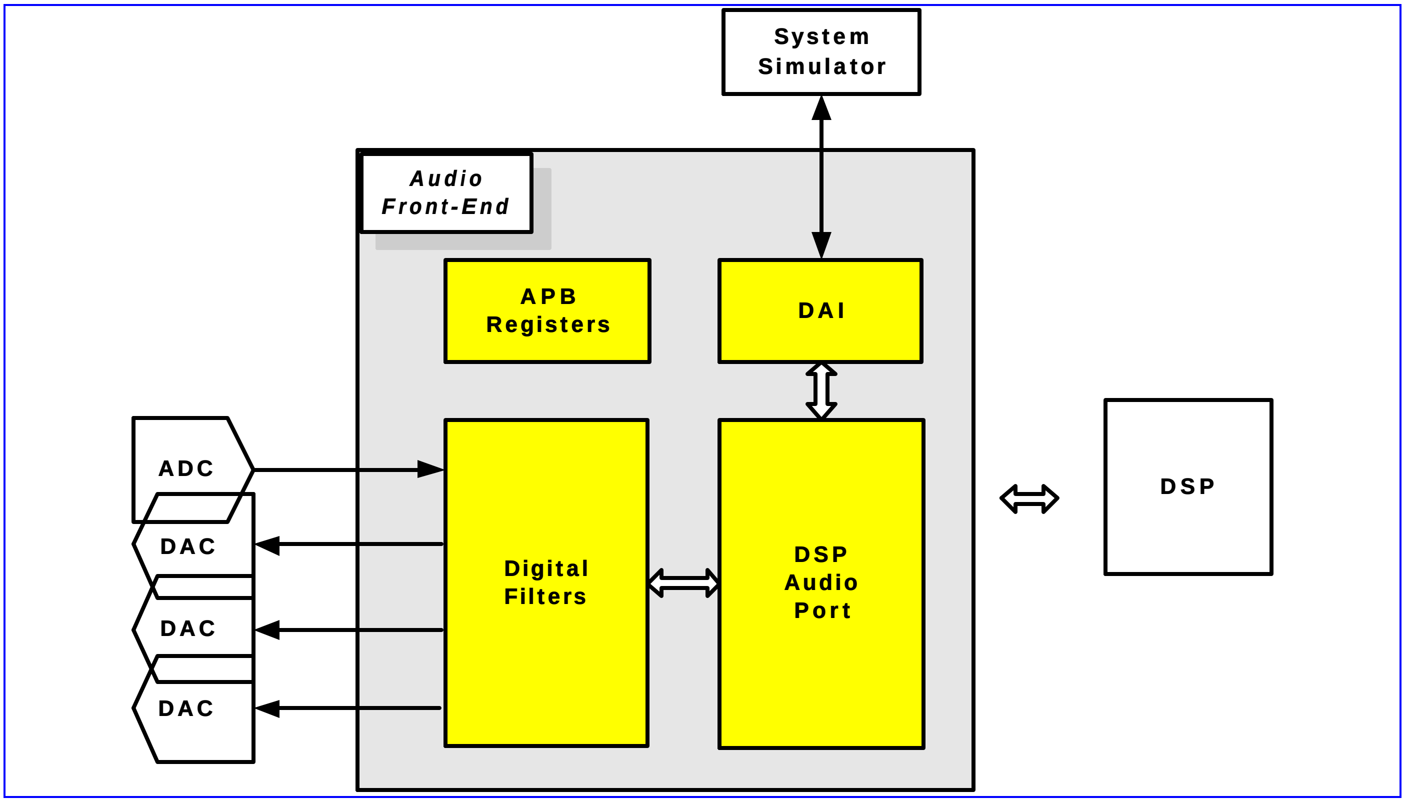

Figure 51 Block diagram of digital circuits of the audio front-end

7.2 Register Definitions

MCU APB bus registers in audio front-end are listed as followings.

AFE+0000h AFE Voice MCU Control Register AFE_VMCU_CON0

Bit	15	14	13	12	11	10	9	8	7	6	5	4	3	2	1	0
Name																VAFEON
Type																R/W
Reset																0

MCU sets this register to start AFE voice operation. A synchronous reset signal will be issued. Then periodical interrupts of 8-KHz frequency will be issued. Clear this register will stop the interrupt generation.

VAFEON turn on audio front-end operations

AFE+000Ch AFE Voice Analog-Circuit Control Register 1 AFE_VMCU_CON1

Bit	15	14	13	12	11	10	9	8	7	6	5	4	3	2	1	0
Name									VRSDON							
Type									R/W							
Reset									0							

Set this register for consistency of analog circuit setting. Suggested value is 80h

VRSDON voice-band redundant signed digit function on

0: 1-bit 2-level mode
1: 2-bit 3-level mode

AFE+0014h AFE Voice DAI Blue Tooth Control Register AFE_VDB_CON

Bit	15	14	13	12	11	10	9	8	7	6	5	4	3	2	1	0
Name											VDAION	VBTON	VBTSYNC	VBTSLEN		
Type											R/W	R/W	R/W	R/W		
Reset											0	0	0	000		

Set this register for DAI test mode and Blue Tooth application.

VDAION DAI function on

VBTON Blue Tooth function on

VBTSYNC Blue Tooth frame sync type

0: short
1: long

VBTSLEN Blue Tooth frame sync length = VBTSLEN+1

AFE+0018h AFE Voice Look-Back mode Control Register AFE_VLB_CON

Bit	15	14	13	12	11	10	9	8	7	6	5	4	3	2	1	0
Name													VBYPASSIIR	VDAPINMODE	VINTINMODE	VDECINMODE
Type													R/W	R/W	R/W	R/W
Reset													0	0	0	0

Set this register for AFE voice digital circuit configuration control. There are several loop back modes implemented for test purposes. Default values correspond to the normal function mode

VBYPASSIIR bypass hardware IIR filters

VDAPINMODE DSP audio port input mode control

0: normal mode
1: loop back mode

VINTINMODE interpolator input mode control

0: normal mode
1: loop back mode

VDECINMODE decimator input mode control

0: normal mode

1: loop back mode

AFE+0020h AFE Audio MCU Control Register 0 AFE_AMCU_CON0

Bit	15	14	13	12	11	10	9	8	7	6	5	4	3	2	1	0
Name																AAFEON
Type																R/W
Reset																0

MCU sets this register to start AFE audio operation. A synchronous reset signal will be issued. Then periodical interrupts of 1/6 sampling frequency will be issued. Clear this register will stop the interrupt generation.

AFE+0024h AFE Audio Control Register 1 AFE_AMCU_CON1

Bit	15	14	13	12	11	10	9	8	7	6	5	4	3	2	1	0
Name								ADITHON	ADITHVAL		ARAMPSP		AMUTER	AMUTEL	AFS	
Type								R/W	R/W		R/W		R/W	R/W	R/W	
Reset								0	00		00		0	0	00	

MCU set this register to inform hardware the sampling frequency of audio being playback.

ADITHON audio dither function on

ADITHVAL dither scaling setting

00: 1/4
01: 1/2
10: 1
11: 2

ARAMPSP ramp up/down speed selection

00: 8, 4096/AFS
01: 16, 2048/AFS
10: 24, 1024/AFS
11: 32, 512/AFS

AMUTER mute audio R-channel, with soft ramp up/down

AMUTEL mute audio L-channel, with soft ramp up/down

AFS sampling frequency setting

00: 32-KHz
01: 44.1-KHz
10: 48-KHz
11: reserved

7.3 Programming Guide

There are several cases, including speech call, voice memo record, voice memo playback, melody playback and DAI tests, partial or whole audio front-end need to be turned on.

Followings are voice band path programming procedures recommended to turn on audio front-end:

- MCU programs the AFE_DAI_CON, AFE_LB_CON, AFE_ VAG_CON, AFE_ VAC_CON0, AFE_ VAC_CON1 and AFE_VAPDN_CON registers for specific operation modes. Please also refer to analog chip interface specification.
- MCU clear VAFE bit of PDN_CON2 register to un-gate the clock for voice band path. Please refer to software power down control specification.
- MCU set AFE_ VMCU_CON to start the operation of voice band path.

Followings are voice band path programming procedures recommended to turn off audio front-end:

- MCU programs AFE_ VAPDN_CON to power down voice band path analog blocks.
- MCU clear AFE_VMCU_CON to stop the operation of voice band path.
- MCU set VAFE bit of PDN_CON2 register to gate the clock for voice band path.

To start the DAI test, the MS firstly receives a GSM Layer 3 TEST_INTERFACE message from the SS and puts the speech transcoder into one of the following modes:

- Normal mode (VDAIMODE[1:0]: 00)
- Test of speech encoder/DTX functions (VDAIMODE[1:0]: 10)
- Test of speech decoder/DTX functions (VDAIMODE[1:0]: 01)
- Test of acoustic devices and A/D & D/A (VDAIMODE[1:0]: 11)

Then waits for DAIRST# signaling from the SS. Recognizing this, DSP starts to transmit to and/or receive from DSP. For more detail, please refer to GSM 11.10 specification.

Followings are audio band path programming procedures recommended to turn on audio front-end:

- MCU programs the AFE_MCU_CON1, AFE_AAG_CON, AFE_AAC_CON, and AFE_AAPDN_CON registers for specific configurations. Please also refer to analog chip interface specification.
- MCU clear AAFE bit of PDN_CON2 register to un-gate the clock for audio band path. Please refer to software power down control specification.
- MCU set AFE_AMCU_CON0 to start the operation of audio band path.

Followings are audio band path programming procedures recommended to turn off audio front-end:

- MCU programs the AFE_AAPDN_CON to power down audio band path analog blocks. Please refer to analog block specification for more detail.
- MCU clear AFE_AMCU_CON0 to stop the operation of audio band path.
- MCU set AAFE bit of PDN_CON2 register to gate the clock for audio band path.

8 Radio Interface Control

This chapter details the controls of MT6218B baseband processor on the radio part of a GSM/GPRS terminal. To complete a comprehensive control scheme yet being flexible, this radio interface is designed to be configurable to meet variety parameters of radio devices. They consist of Baseband Serial Interface (BSI), Baseband Parallel Interface (BPI), Automatic Power Control (APC) and Automatic Frequency Control (AFC) together with APC-DAC and AFC-DAC.

8.1 Base-band Serial Interface

The Base-band Serial Interface is used to control the external radio components. It utilizes a 3-wire serial bus to transfer data to RF circuitry for PLL frequency change, reception gain setting, and other radio control purposes. In this unit, BSI data registers are double-buffered in the same way as the TDMA event registers. The MCU writes data into the write buffer and the data is transferred from the write buffer to the active buffer when TDMA_EVTVAL signal from the TDMA timer is pulsed.

Each data register BSI_D*n*_DAT is associated with one data control register BSI_D*n*_CON, where *n* denotes the index. The data control register with index *n* used to identify which events (signaled by TDMA_BSISTR*n*) generated by the TDMA timer would trigger the download process of the word in register BSI_D*n*_DAT through the serial bus, as well as the length of the word in length of bits. A special event is defined. The event is triggered by the operation that the MCU writes 1 to the IMOD flag. It provides immediate download process without programming the TDMA timer.

If more than one data word is to be downloaded on the same BSI event, the word with the lowest address among them will be downloaded first, followed by the next lowest and so on.

The total time to download the words depends on the word length, the number of words to download, and the clock rates. The programmer should space the successive event to provide enough time. If the download process of the previous event isn't complete before the new events come, the later will be suppressed.

The unit supports 2 external components. There are four output pins. BSI_CLK is the output clock, BSI_DATA is the serial data port, and BSI_CS0 and BSI_CS1 are the select pins for 2 components, respectively. BSI_CS1 is multiplexed with other function. Please refer to GPIO table for detail.

The block diagram of the BSI unit is as depicted in **Figure 52**.

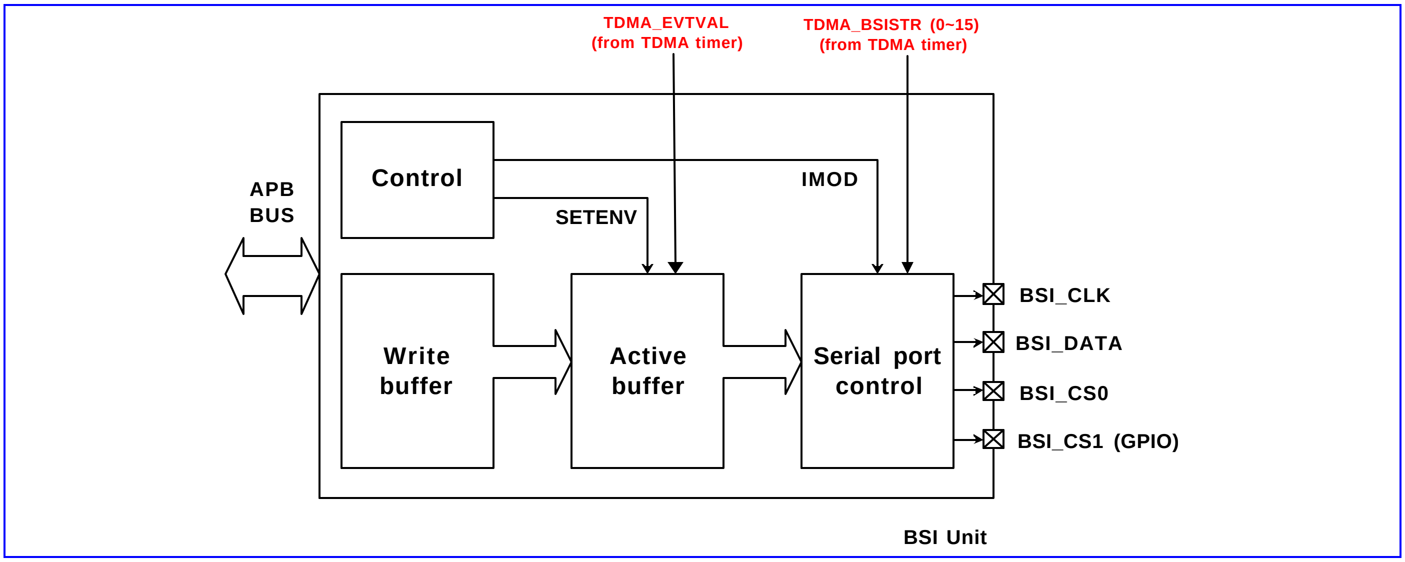

Figure 52 Block diagram of BSI unit.

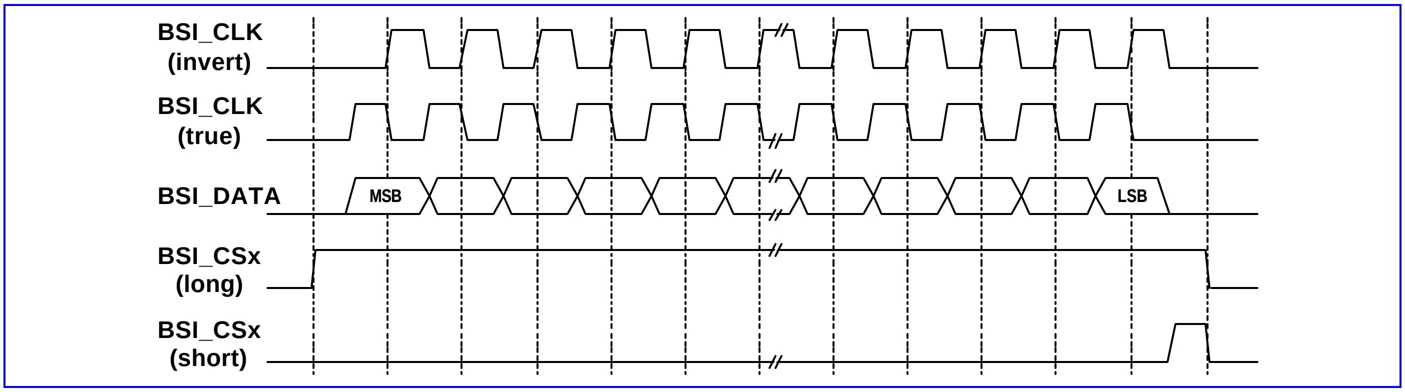

Figure 53 Timing characteristic of BSI interface

8.1.1 Register Definitions

BSI+0000h BSI control register BSI_CON

Bit	15	14	13	12	11	10	9	8	7	6	5	4	3	2	1	0
Name								SETENV	EN1_POL	EN1_LEN	EN0_POL	EN0_LEN	IMOD	CLK_SPD		CLK_POL
Type								R/W	R/W	R/W	R/W	R/W	WO	R/W		R/W
Reset								0	0	0	0	0	N/A	0		0

This register is the control register of the BSI unit. It controls the signal type of the 3-wire interface.

CLK_POL The flag controls the polarity of BSI_CLK. Refer to **Figure 53**.

- **0** True clock polarity
- **1** Inverted clock polarity

CLK_SPD The field defines the clock rate of BSI_CLK. The 3-wire interface provides 4 choices of data bit rate. The default is 13/2 MHz.

- **00** 13/2 MHz

01 13/4 MHz

10 13/6 MHz

11 13/8 MHz

IMOD The field enables the immediate mode. If the MCU writes 1 to the flag, the download will be triggered immediately without waiting for the timer events. The words in which the event ID equals to 1Fh will be downloaded following this signal. This flag is write-only. The immediate write can be exercised for once. That means the programmer should write the flag again to start another immediate downloading. Setting the flag won't disable the other events from the timer. In case it's required to turn off all the events, the programmer can disable them by setting BSI_ENA to all zero.

ENX_LEN The field controls the type of the signal BSI_CS0 and BSI_CS1. Refer to **Figure 53**.

0 Long enable pulse

1 Short enable pulse

ENX_POL The field controls the polarity of the signal BSI_CS0 and BSI_CS1.

0 True enable pulse polarity

1 Inverted enable pulse polarity

SETENV The flag enables the write operation of the active buffer.

0 The MCU writes to the write buffer. The data is then latched in the active buffer after TDMA_EVTVAL is pulsed

1 The MCU directly write data to the active buffer.

BSI+0004h Control part of data register 0 BSI_D0_CON

Bit	15	14	13	12	11	10	9	8	7	6	5	4	3	2	1	0
Name	ISB			LEN								EVT_ID				
Type	R/W			R/W								R/W				

The register is the control part of the data register 0. It decides the required length of the download data word, the event to trigger the download process of the word, and which device it targets.

There are 26 data registers of this type as listed in **Table 35**.

EVT_ID This field stores the event ID that the data word is due to be downloaded.

00000~01111 Synchronously download of the word with the selected EVT_ID event. The match between this field and the event is listed as **Table 7**.

Event ID (in binary) – EVT_ID	Event name
00000	TDMA_BSISTR0
00001	TDMA_BSISTR1
00010	TDMA_BSISTR2
00011	TDMA_BSISTR3
00100	TDMA_BSISTR4
00101	TDMA_BSISTR5
00110	TDMA_BSISTR6
00111	TDMA_BSISTR7
01000	TDMA_BSISTR8
01001	TDMA_BSISTR9
01010	TDMA_BSISTR10

01011	TDMA_BSISTR11
01100	TDMA_BSISTR12
01101	TDMA_BSISTR13
01110	TDMA_BSISTR14
01111	TDMA_BSISTR15

Table 34 The match between the value of EVT_ID field in the BSI control registers and the TDMA_BSISTR events.

10000~11110 Reserved

11111 Immediate download

LEN The field stores the length of the data word. The actual length is defined as LEN + 1 in units of bits. The value ranges from 0 to 31, corresponding to 1 to 32 bits in length.

ISB The flag selects the target device.

0 Device 0 is selected.

1 Device 1 is selected.

BSI +0008h Data part of data register 0 BSI_D0_DAT

Bit	31	30	29	28	27	26	25	24	23	22	21	20	19	18	17	16
Name	DAT [31:16]															
Type	R/W															
Bit	15	14	13	12	11	10	9	8	7	6	5	4	3	2	1	0
Name	DAT [15:0]															
Type	R/W															

The register is the data part of the data register 0. The illegal length of the data is up to 32 bits. The actual number of bits to be transmitted is specified in LEN field in BSI_D0_CON register.

DAT The field signifies the data part of the data register.

There are totally 26 pairs of data registers. The address mapping and function is listed as

Register Address	Register Function	Acronym
BSI +0004h	Control part of data register 0	BSI_D0_CON
BSI +0008h	Data part of data register 0	BSI_D0_DAT
BSI +000Ch	Control part of data register 1	BSI_D1_CON
BSI +0010h	Data part of data register 1	BSI_D1_ DAT
BSI +0014h	Control part of data register 2	BSI_D2_CON
BSI +0018h	Data part of data register 2	BSI_D2_ DAT
BSI +001Ch	Control part of data register 3	BSI_D3_CON
BSI +0020h	Data part of data register 3	BSI_D3_ DAT
BSI +0024h	Control part of data register 4	BSI_D4_CON
BSI +0028h	Data part of data register 4	BSI_D4_ DAT
BSI +002Ch	Control part of data register 5	BSI_D5_CON
BSI +0030h	Data part of data register 5	BSI_D5_ DAT
BSI +0034h	Control part of data register 6	BSI_D6_CON
BSI +0038h	Data part of data register 6	BSI_D6_ DAT
BSI +003Ch	Control part of data register 7	BSI_D7_CON

BSI +0040h	Data part of data register 7	BSI_D7_ DAT
BSI +0044h	Control part of data register 8	BSI_D8_CON
BSI +0048h	Data part of data register 8	BSI_D8_ DAT
BSI +004Ch	Control part of data register 9	BSI_D9_CON
BSI +0050h	Data part of data register 9	BSI_D9_ DAT
BSI +0054h	Control part of data register 10	BSI_D10_CON
BSI +0058h	Data part of data register 10	BSI_D10_ DATA
BSI +005Ch	Control part of data register 11	BSI_D11_CON
BSI +0060h	Data part of data register 11	BSI_D11_ DAT
BSI +0064h	Control part of data register 12	BSI_D12_CON
BSI +0068h	Data part of data register 12	BSI_D12_ DAT
BSI +006Ch	Control part of data register 13	BSI_D13_CON
BSI +0070h	Data part of data register 13	BSI_D13_ DAT
BSI +0074h	Control part of data register 14	BSI_D14_CON
BSI +0078h	Data part of data register 14	BSI_D14_ DAT
BSI +007Ch	Control part of data register 15	BSI_D15_CON
BSI +0080h	Data part of data register 15	BSI_D15_ DAT
BSI +0084h	Control part of data register 16	BSI_D16_CON
BSI +0088h	Data part of data register 16	BSI_D16_ DAT
BSI +008Ch	Control part of data register 17	BSI_D17_CON
BSI +0090h	Data part of data register 17	BSI_D17_ DAT
BSI +0094h	Control part of data register 18	BSI_D18_CON
BSI +0098h	Data part of data register 18	BSI_D18_ DAT
BSI +009Ch	Control part of data register 19	BSI_D19_CON
BSI +00A0h	Data part of data register 19	BSI_D19_ DAT
BSI +00A4h	Control part of data register 20	BSI_D20_CON
BSI +00A8h	Data part of data register 20	BSI_D20_ DAT
BSI +00ACh	Control part of data register 21	BSI_D21_CON
BSI +00B0h	Data part of data register 21	BSI_D21_ DAT
BSI +00B4h	Control part of data register 22	BSI_D22_CON
BSI +00B8h	Data part of data register 22	BSI_D22_ DAT
BSI +00BCh	Control part of data register 23	BSI_D23_CON
BSI +00C0h	Data part of data register 23	BSI_D23_ DAT
BSI +00C4h	Control part of data register 24	BSI_D24_CON
BSI +00C8h	Data part of data register 24	BSI_D24_ DAT
BSI +00CCh	Control part of data register 25	BSI_D25_CON
BSI +00D0h	Data part of data register 25	BSI_D25_ DAT

Table 35 BSI data registers

BSI +0190h BSI event enable register BSI_ENA

Bit	15	14	13	12	11	10	9	8	7	6	5	4	3	2	1	0
Name	BSI15	BSI14	BSI13	BSI12	BSI11	BSI10	BSI9	BSI8	BSI7	BSI6	BSI5	BSI4	BSI3	BSI2	BSI1	BSI0
Type	R/W	R/W	R/W	R/W	R/W	R/W	R/W	R/W	R/W	R/W	R/W	R/W	R/W	R/W	R/W	R/W
Reset	1	1	1	1	1	1	1	1	1	1	1	1	1	1	1	1

The register could enable the event by setting the corresponding bit. After hardware reset, all bits are initialized as 1. Besides, those bits are set as 1 after TDMA_EVTVAL is pulsed.

BSIx The flag enables the downloading of the words that corresponds to the events signaled by TMDA_BSI.

- **0** The event is not enabled.
- **1** The event is enabled.

8.2 Base-band Parallel Interface

8.2.1 General description

The Base-band Parallel Interface features a 10-pin output bus used for timing-critical control of the external circuits. These pins are typically used to control front-end components at the specified time along the GSM time-base, such as transmit-enable, band switching, TR-switch, … etc.

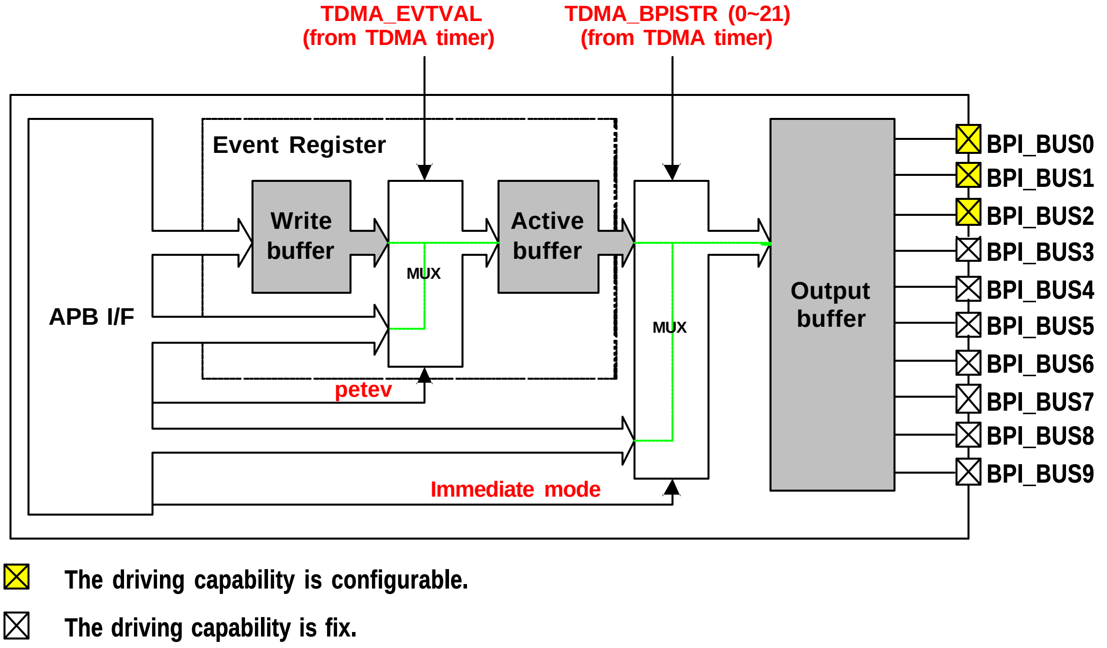

Figure 54 Block diagram of BPI interface

22 sets of 10-bit register can be programmed by the MCU to define the output value of BPI_BUS0~BPI_BUS9 with respect to the TDMA timer. Each TDMA_BPISTR event triggers the transfer of the corresponding value in the registers to the output buffer, thus change the value of the BPI bus. If any TDMA_BPISTR event is disabled in the TDMA timer, the corresponding signal TDMA_BPISTR will not be pulsed, and the corresponding transfer will not take place and the value on the BPI bus will remain unchanged.

The BPI data registers are double-buffered, the transfer from the write buffer to the active buffer takes place on assertion of the TDMA_EVTVAL signal, and the transfer from the active buffer to the output buffer takes place on assertion of the TDMA_BPISTR events signaled by the TDMA timer

For applications in which BPI signals serve as the switch, typically some current-driving components are added to enhance the driving capability. We provide 3 configurable output pins with up to 8mA current. It's intended to reduce the number of the external components.

The output pin BPI_BUS9 is multiplexed with GPIO. Please refer to GPIO table for detail.

8.2.2 Register Definitions

BPI+0000h BPI control register BPI_CON

Bit	15	14	13	12	11	10	9	8	7	6	5	4	3	2	1	0
Name													PINM2	PINM1	PINM0	PETEV
Type													WO	WO	WO	R/W
Reset													0	0	0	0

The register is the control register of the BPI unit. It controls the direct access mode of the active buffer and the current driving mode for the output pins.

The driving capability of BPI_BUS0, BPI_BUS1, and BPI_BUS2 can be 4mA or 8mA, selected by PINM0, PINM1, and PINM2, respectively. To provide high driving capability can save some external current-driving components. The driving capability of BPI_BUS3, BPI_BUS4, BPI_BUS5, BPI_BUS6, and BPI_BUS7 is 2mA.

PETEV The flag is used to enable the direct access to the active buffer.

- **0** The MCU writes data to the write buffer. The data is latched in the active buffer after the TDMA_EVTVAL signal is pulsed.
- **1** The MCU directly writes data to the active buffer without waiting for the TDMA_EVTVAL signal.

PINM0 The field controls the driving capability of BPI_BUS0.

- **0** The output driving capability is 4mA.
- **1** The output driving capability is 8mA.

PINM1 The field controls the driving capability of BPI_BUS1.

- **0** The output driving capability is 4mA.
- **1** The output driving capability is 8mA.

PINM2 The field controls the driving capability of BPI_BUS2.

- **0** The output driving capability is 4mA.
- **1** The output driving capability is 8mA.

BPI +0004h BPI data register 0 BPI_BUF0

Bit	15	14	13	12	11	10	9	8	7	6	5	4	3	2	1	0
Name							PO9	PO8	PO7	PO6	PO5	PO4	PO3	PO2	PO1	PO0
Type							R/W	R/W	R/W	R/W	R/W	R/W	R/W	R/W	R/W	R/W

The register defines the signals of the 10 BPI output pins if the event TDMA_BPI0 takes place. There are 22 registers, which is associated with 22 events, of the same type as listed in **Table 36**. The data registers are all double-buffered. When PETEV is set to 0, the MCU writes to the write buffer. When PETEV is set to 1, the MCU writes to the active buffer.

There is one register BPI_BUFI dedicated to be used in immediate mode. Writing the value to that register will take effect at once. The value, however, might be updated whenever a TDMA event comes when the event is enabled. The immediate mode provides an immediate operation on the programming of the BPI bus, but it doesn't gate the signals from the TDMA timer, nor does it revise the contents in the write or active buffers as well as the enable registers BPI_ENA0 and BPI_ENA1.

POx The flag defines the corresponding value of the output pins BPIx after the event 0 takes place.

The overall data register definition is listed in **Table 36**.

Register Address	Register Function	Acronym
BPI +0004h	BPI pin data for event TDMA_BPI 0	BPI_BUF0
BPI +0008h	BPI pin data for event TDMA_BPI 1	BPI_BUF1
BPI +000Ch	BPI pin data for event TDMA_BPI 2	BPI_BUF2
BPI +0010h	BPI pin data for event TDMA_BPI 3	BPI_BUF3
BPI +0014h	BPI pin data for event TDMA_BPI 4	BPI_BUF4
BPI +0018h	BPI pin data for event TDMA_BPI 5	BPI_BUF5
BPI +001Ch	BPI pin data for event TDMA_BPI 6	BPI_BUF6
BPI +0020h	BPI pin data for event TDMA_BPI 7	BPI_BUF7
BPI +0024h	BPI pin data for event TDMA_BPI 8	BPI_BUF8
BPI +0028h	BPI pin data for event TDMA_BPI 9	BPI_BUF9
BPI +002Ch	BPI pin data for event TDMA_BPI 10	BPI_BUF10
BPI +0030h	BPI pin data for event TDMA_BPI 11	BPI_BUF11
BPI +0034h	BPI pin data for event TDMA_BPI 12	BPI_BUF12
BPI +0038h	BPI pin data for event TDMA_BPI 13	BPI_BUF13
BPI +003Ch	BPI pin data for event TDMA_BPI 14	BPI_BUF14
BPI +0040h	BPI pin data for event TDMA_BPI 15	BPI_BUF15
BPI +0044h	BPI pin data for event TDMA_BPI 16	BPI_BUF16
BPI +0048h	BPI pin data for event TDMA_BPI 17	BPI_BUF17
BPI +004Ch	BPI pin data for event TDMA_BPI 18	BPI_BUF18
BPI +0050h	BPI pin data for event TDMA_BPI 19	BPI_BUF19
BPI +0054h	BPI pin data for event TDMA_BPI 20	BPI_BUF20
BPI +0058h	BPI pin data for event TDMA_BPI 21	BPI_BUF21
BPI +005Ch	BPI pin data for immediate mode	BPI_BUFI

Table 36 BPI Data Registers

BPI +0060h BPI event enable register 0 BPI_ENA0

Bit	15	14	13	12	11	10	9	8	7	6	5	4	3	2	1	0
Name	BEN15	BEN14	BEN13	BEN12	BEN11	BEN10	BEN9	BEN8	BEN7	BEN6	BEN5	BEN4	BEN3	BEN2	BEN1	BEN0
Type	R/W	R/W	R/W	R/W	R/W	R/W	R/W	R/W	R/W	R/W	R/W	R/W	R/W	R/W	R/W	R/W
Reset	1	1	1	1	1	1	1	1	1	1	1	1	1	1	1	1

The register is used to enable the events that are signaled by the TDMA timer. After hardware reset, all the enable bits are initialized as 1. Upon receiving the TDMA_EVTVAL pulse, those bits are also set to 1.

BENx The flag controls the function of event x.

- **0** The event x is disabled.
- **1** The event x is enabled.

BPI+0064h BPI event enable register 1 BPI_ENA1

Bit	15	14	13	12	11	10	9	8	7	6	5	4	3	2	1	0
Name											BEN21	BEN20	BEN19	BEN18	BEN17	BEN16
Type											R/W	R/W	R/W	R/W	R/W	R/W
Reset											0	0	0	0	0	0

The register is used to enable the events that are signaled by the TDMA timing generator. After hardware reset, all the enable bits are initialized as 1. Upon receiving the TDMA_EVTVAL pulse, those bits are also set to 1.

8.3 Automatic Power Control (APC) Unit

8.3.1 General description

Automatic Power Control unit is used to control the Power Amplifier (PA) module. Through APC unit, we can set the proper transmit power level of the handset and to ensure that the burst power ramping requirements are met. In one TDMA frame, up to 7 TDMA events can be enabled to support multi-slot transmission. In practice, 5 banks of ramp profiles are used in one frame to make up 4 consecutive transmission slots.

The shape and magnitude of the ramp profiles are configurable to fit ramp-up (ramp up from zero), intermediate ramp (ramp between Transmission windows), and ramp -down (ramp down to zero) profiles. Each bank of the ramp profile consists of 16 8-bit unsigned values, which is adjustable for different conditions.

The entries fromone bank ofthe ramp profile are partitioned into two parts, with 8 values in each part. In normal operation, the entries in the left half part are multiplied by a 10-bit left scaling factor, and the entries in the right half part are multiplied by a 10-bit right scaling factor. Those values are then truncated to form 16 10-bit intermediate values. Finally the intermediate ramp profile are linearly interpolated into 32 10-bit values and sequentially used to update to the D/A converter. The block diagram of the APC unit is shown in **Figure 55**.

The APB bus interface is 32 bits width. It takes 4 write accesses to program each bank of ramp profile. The detail register allocation is as listed in **Table 37**.

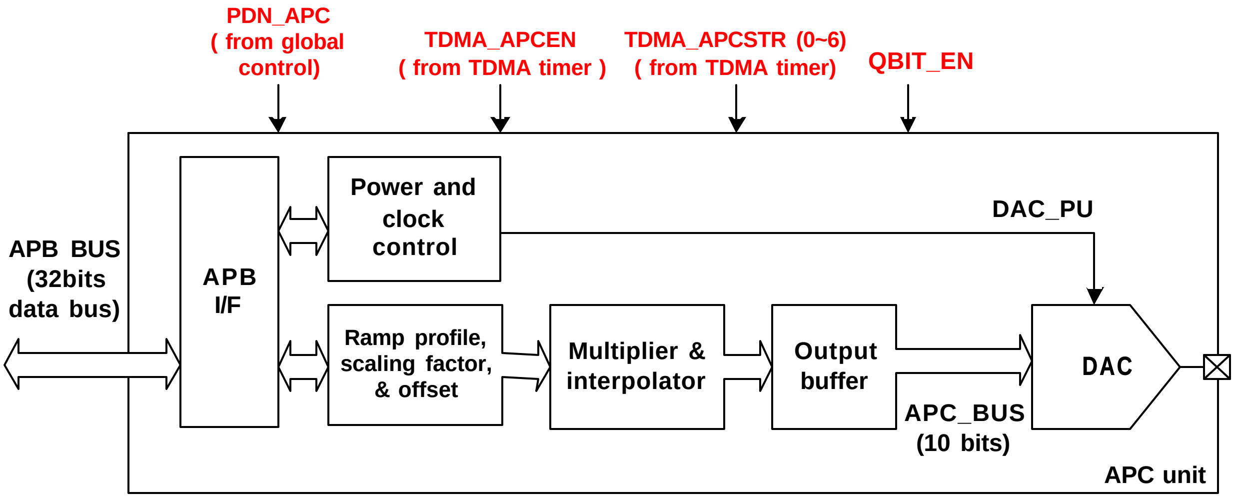

Figure 55 Block diagram of APC unit.

8.3.2 Register Definitions

APC+0000h APC 1st ramp profile #0 APC_PFA0

Bit	31	30	29	28	27	26	25	24	23	22	21	20	19	18	17	16
Name	ENT3								ENT2							
Type	R/W								R/W							
Bit	15	14	13	12	11	10	9	8	7	6	5	4	3	2	1	0
Name	ENT1								ENT0							
Type	R/W								R/W							

The register stores the first four entries of the first power ramp profile. The first entry resides in the least significant byte [7:0], the second in the second byte [15:8], the third in the third byte [23:16], and the forth in the most significant byte [31:24]. Since this register provides no hardware reset, the programmer should configure it before any APC event takes place.

ENT3 The field signifies the 4th entry of the 1st ramp profile.

ENT2 The field signifies the 3rd entry of the 1st ramp profile.

ENT1 The field signifies the 2nd entry of the 1st ramp profile.

ENT0 The field signifies the 1st entry of the 1st ramp profile.

The overall ramp profile register definition is listed in **Table 37**.

Register Address	Register Function	Acronym
APC +0000h	APC 1st ramp profile #0	APC_PFA0
APC +0004h	APC 1st ramp profile #1	APC_PFA1
APC +0008h	APC 1st ramp profile #2	APC_PFA2
APC +000Ch	APC 1st ramp profile #3	APC_PFA3
APC +0020h	APC 2nd ramp profile #0	APC_PFB0
APC +0024h	APC 2nd ramp profile #1	APC_PFB1
APC +0028h	APC 2nd ramp profile #2	APC_PFB2
APC +002Ch	APC 2nd ramp profile #3	APC_PFB3

APC +0040h	APC 3rd ramp profile #0	APC_PFC0
APC +0044h	APC 3rd ramp profile #1	APC_PFC1
APC +0048h	APC 3rd ramp profile #2	APC_PFC2
APC +004Ch	APC 3rd ramp profile #3	APC_PFC3
APC +0060h	APC 4th ramp profile #0	APC_PFD0
APC +0064h	APC 4th ramp profile #1	APC_PFD1
APC +0068h	APC 4th ramp profile #2	APC_PFD2
APC +006Ch	APC 4th ramp profile #3	APC_PFD3
APC +0080h	APC 5th ramp profile #0	APC_PFE0
APC +0084h	APC 5th ramp profile #1	APC_PFE1
APC +0088h	APC 5th ramp profile #2	APC_PFE2
APC +008Ch	APC 5th ramp profile #3	APC_PFE3
APC +00A0h	APC 6th ramp profile #0	APC_PFF0
APC +00A4h	APC 6th ramp profile #1	APC_PFF1
APC +00A8h	APC 6th ramp profile #2	APC_PFF2
APC +00ACh	APC 6th ramp profile #3	APC_PFF3
APC +00C0h	APC 7th ramp profile #0	APC_PFG0
APC +00C4h	APC 7th ramp profile #1	APC_PFG1
APC +00C8h	APC 7th ramp profile #2	APC_PFG2
APC +00CCh	APC 7th ramp profile #3	APC_PFG3

Table 37 APC ramp profile registers

APC +0010h APC 1st ramp profile left scaling factor APC_SCAL0L

Bit	15	14	13	12	11	10	9	8	7	6	5	4	3	2	1	0
Name							SCAL									
Type							R/W									
Reset							1_0000_0000									

The register stores the left scaling factor of the 1st ramp profile. This factor multiplies the first 8 entries of the 1st ramp profile to provide the scaled profile, which is then interpolated to control the D/A converter.

After hardware reset, the initial value of the register is 256. In that case, no scaling in done, that is, each entry of the ramp profile is multiplied by 1. That's because 8 least significant bits will be truncated after multiplication.

The overall scaling factor register definition is listed in **Table 7**.

SF The field is the scaling factor. After hardware reset, the value is 256.

APC +0014h APC 1st ramp profile right scaling factor APC_SCAL0R

Bit	15	14	13	12	11	10	9	8	7	6	5	4	3	2	1	0
Name							SF									
Type							R/W									
Reset							1_0000_0000									

The register stores the right scaling factor of the 1st ramp profile. This factor multiplies the last 8 entries of the 1st ramp profile to provide the scaled profile, which is then interpolated to control the D/A converter.

After hardware reset, the initial value of the register is 256. In that case, no scaling in done, that is, each entry of the ramp profile is multiplied by 1. That's because 8 least significant bits will be truncated after multiplication.

The overall scaling factor register definition is listed in **Table 7**.

SF The field is the scaling factor. After hardware reset, the value is 256.

APC+0018h APC 1st ramp profile offset value APC_OFFSET0

Bit	15	14	13	12	11	10	9	8	7	6	5	4	3	2	1	0
Name							OFFSET									
Type							R/W									
Reset							0									

There are 7 offset values for the corresponding ramp profile.

The 1st offset value also serves as the pedestal value. It's used to power up the APC D/A converter before the RF signals start to transmit. The D/A converter is then biased on the value. It's intended to provide initial control voltage of the external control loop. The exact value depends on the characteristics of the external components. The timing to output the pedestal value is configurable through the TDMA_BULCON2 register of the timing generator. It can be set to 0~127 quarter bit time after the base-band D/A converter is powered up.

OFFSET The field stores the offset value for the corresponding ramp profile. After hardware reset, the default value is 0.

The overall offset register definition is listed in **Table 7**.

Register Address	Register Function	Acronym
APC +0010h	APC 1st ramp profile left scaling factor	APC_SCAL0L
APC +0014h	APC 1st ramp profile right scaling factor	APC_SCAL0R
APC +0018h	APC 1st ramp profile offset value	APC_OFFSET0
APC +0030h	APC 2nd ramp profile left scaling factor	APC_SCAL1L
APC +0034h	APC 2nd ramp profile right scaling factor	APC_SCAL1R
APC +0038h	APC 2nd ramp profile offset value	APC_OFFSET1
APC +0050h	APC 3rd ramp profile left scaling factor	APC_SCAL2L
APC +0054h	APC 3rd ramp profile right scaling factor	APC_SCAL2R
APC +0058h	APC 3rd ramp profile offset value	APC_OFFSET2
APC +0070h	APC 4th ramp profile left scaling factor	APC_SCAL3L
APC +0074h	APC 4th ramp profile right scaling factor	APC_SCAL3R
APC +0078h	APC 4th ramp profile offset value	APC_OFFSET3
APC +0090h	APC 5th ramp profile left scaling factor	APC_SCAL4L
APC +0094h	APC 5th ramp profile right scaling factor	APC_SCAL4R
APC +0098h	APC 5th ramp profile offset value	APC_OFFSET4
APC +00B0h	APC 6th ramp profile left scaling factor	APC_SCAL5L
APC +00B4h	APC 6th ramp profile right scaling factor	APC_SCAL5R
APC +00B8h	APC 6th ramp profile offset value	APC_OFFSET5
APC +00D0h	APC 7th ramp profile left scaling factor	APC_SCAL6L
APC +00D4h	APC 7th ramp profile right scaling factor	APC_SCAL6R
APC +00D8h	APC 7th ramp profile offset value	APC_OFFSET6

MediaTek Inc. Confidential

Table 38 APC scaling factor and offset value registers

APC+00E0h APC control register APC_CON

Bit	15	14	13	12	11	10	9	8	7	6	5	4	3	2	1	0
Name															GSM	FPU
Type															R/W	R/W
Reset															1	0

GSM This field defines the operation mode of the APC module. In GSM mode, since there is only one slot in one frame, only one scaling factor and one offset value is required to configure. If the bit is set, the programmer needs only to configure APC_SCAL0L and APC_OFFSET0. If the bit is not set, the APC module is operated in GPRS mode.

- **0** The APC module is operated in GPRS mode.
- **1** The APC module is operated in GSM mode. Default value.

FPU This field is used to force power on the APC D/A converter. Test only.

- **0** The APC D/A converter is not forced power up. It's then only powered on when the transmission window is opened. Default value.
- **1** The APC D/A converter is forced power up.

8.3.3 Ramp profile programming

The first value of the first normalized ramp profile should be written in the least significant byte of the APC_PFA0 register. The second value should be written in the second least significant byte of the APC_PFA0, and vice versa.

Each ramp profile can be programmed to form arbitrary shape.

The start of ramping is triggered by one of the TDMA_APCSTR signals. The timing relationship of TDMA_APCSTR and TDMA slots is as depicted in **Figure 56** for 4 consecutive time slots case. The power ramping profile should comply with the timing mask defined in GSM SPEC 05.05. The timing offset values for 7 ramp profiles are stored in TDMA timer register from TDMA_APC0 to TDMA_APC6.

Since the APC unit provides more than 5 ramp profiles, it's able to accommodate up to 4 consecutive transmission slots. The additional 2 ramp profiles are used particularly when the timing relation between the last 2 transmission time slots and CTIRQ is uncertain. That provides the possibility to use some of them interchangeably in one and its succeeding frames.

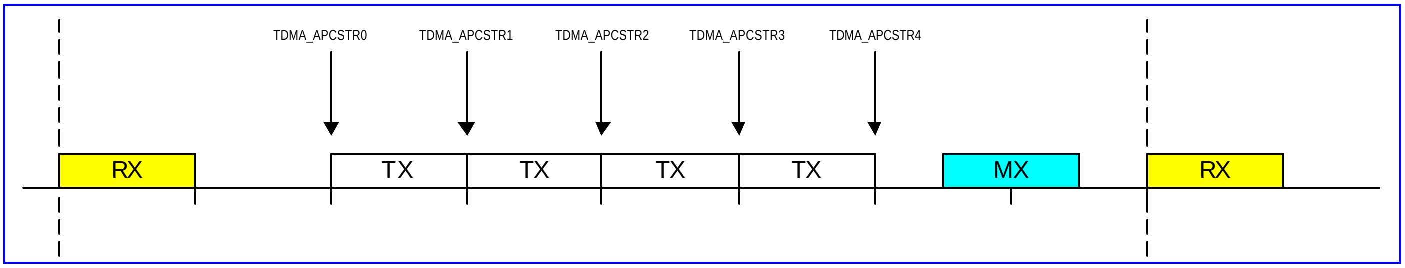

Figure 56 Timing diagram of TDMA_APCSTR.

In GPRS mode, in order to fit the intermediate ramp profile between different power levels, a simple scheme with scaling is used to synthesize the ramp profile. The equation is as follows:

$$DA_0 = OFF + S_0 \cdot \frac{DN_{15,pre} + DN_0}{2}$$

$$DA_{2k} = OFF + S_l \cdot \frac{DN_{k-1} + DN_k}{2}, k = 1,...,15$$

$$DA_{2k+1} = OFF + S_l \cdot DN_k, k = 0,1,...,15$$

$$l = \begin{cases} 0, & \text{if } 8 > k \geq 0 \\ 1, & \text{if } 15 \geq k \geq 8 \end{cases}$$

where **DA** represents the data to present to the D/A converter, **DN** represents the normalized data which is stored in the register **APC_PF*n***, $\mathbf{S_0}$ represents the left scaling factor stored in register **APC_SCAL*nL***, $\mathbf{S_1}$ represents the right scaling factor stored in register **APC_SCAL*nR***, and **OFF** represents the offset value stored in the register **APC_OFFSET*n***. The subscript ***n*** denotes the index of the ramp profile.

The ramp calculation before interpolation is as depicted in Figure 57.

During each ramp process, each word of the normalized profile is first multiplied by 10-bit scaling factors and added by an offset value to form a bank of 18-bit words. The first 8 words (in the left half part as in Figure 57) are multiplied by the left scaling factor $\mathbf{S_0}$ and the last 8 words (in the right half part as in Figure 57) are multiplied by the right scaling factor $\mathbf{S_1}$. The lowest 8-bit of each word will be then punctured to get a 10-bit result. The scaling factor is 100 in hexadecimal, which represents no scaling, on reset. The value smaller than 100 will scale down the ramp profile, and the larger value will scale up the ramp profile.

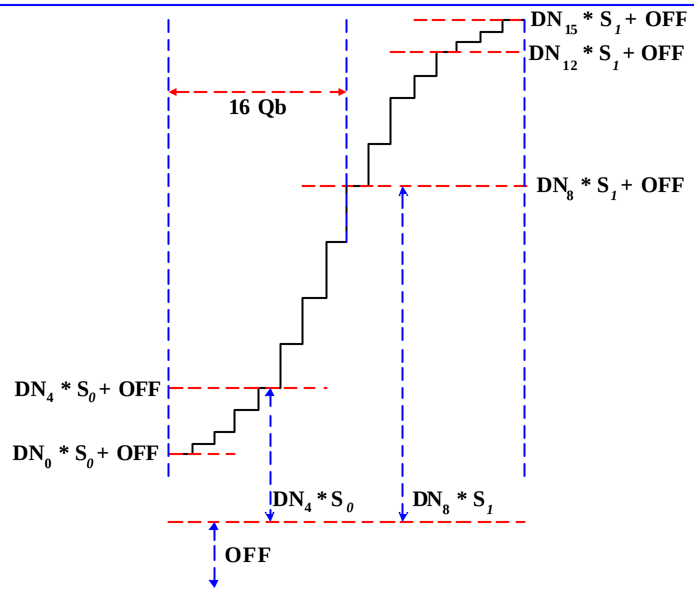

Figure 57 The timing diagram of the APC ramp.

The 16 10-bit words are linearly interpolated into 32 10-bit words. A 10-bit D/A converter is then used to convert these 32 ramp values in a rate of 1.0833MHz, that is, quarter bit rate. The timing diagram is shown in **Figure 58** and the final value will be retained on the output until the next event occurs.

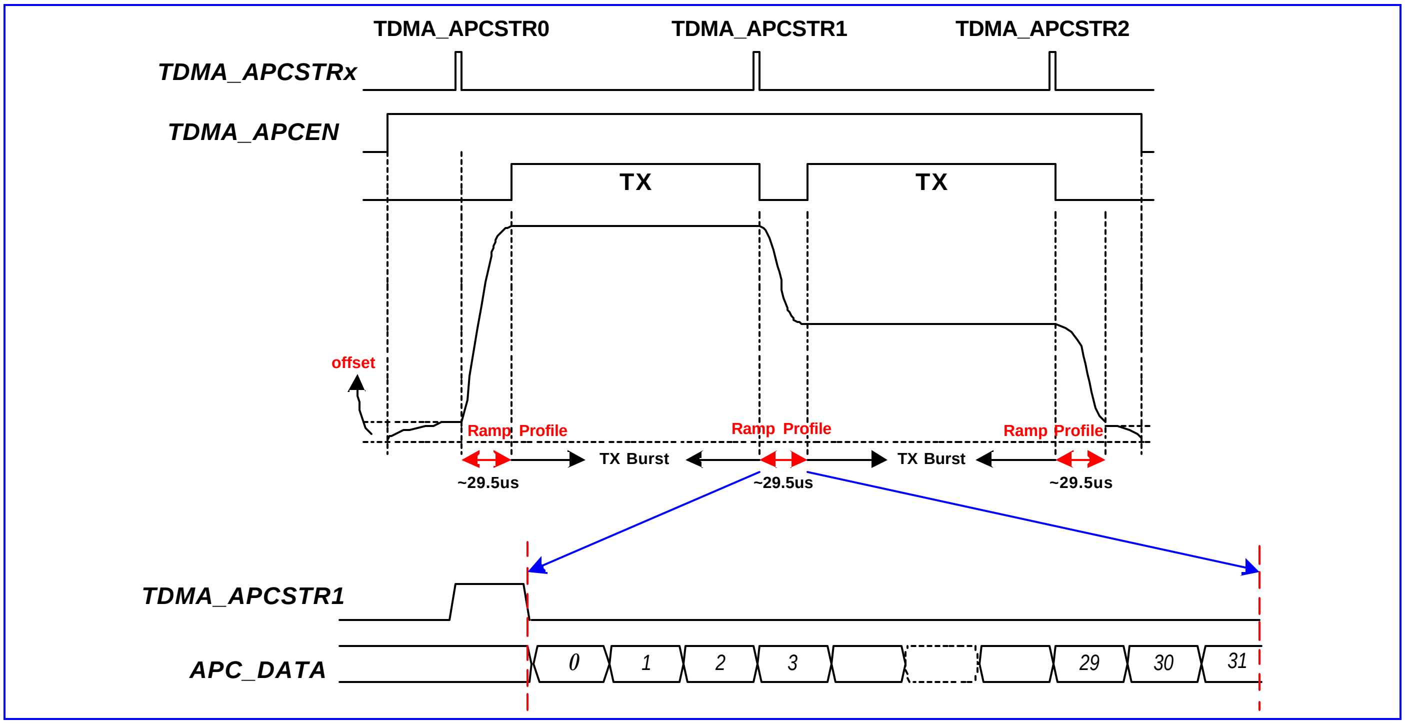

Figure 58 Timing diagram of the APC ramping.

The APC unit will only be powered up when the APC window is opened. The APC window is controlled by configuring the TDMA registers TDMA_BULCON1 and TDMA_BULCON2. Please refer to TDMA timer unit for detail information.

The first offset value stored in the register APC_OFFSET0 also serves as the pedestal value, which is used to provide the initial power level for the PA.

Since the profile is not double-buffered, the timing to write the ramping profile would be critical. The programmer should prevent from writing the data buffer at the time that the ramping process is taking place. Or it would result in the wrong ramp profile and malfunction.

8.4 Automatic Frequency Control (AFC) Unit

8.4.1 General description

Automatic Frequency Control unit provides the direct control of the oscillator for frequency offset and Doppler shift compensation. The block diagram is depicted in **Figure 59**. It utilizes a 13-bit D/A converter to achieve high-resolution control. Two modes of operation are supported and described as follows.

In timer-triggered mode, the TDMA timer controls the AFC enabling events. There provided at most four events within one TDMA frame. Double buffer architecture is supported. The AFC values can be written to the write buffers. When the signal TDMA_EVTVAL takes place, the values in the write buffers will be latched in the active buffers. However, the AFC values can also be written to the active buffers directly. When a TDMA event triggered by TDMA_AFC takes place, the value in the corresponding active buffer with the same index take effect. Each event is associated with an active buffer. An illustrative timing diagram of AFC events with respect to TX/RX/MX windows is depicted in **Figure 60**. In this mode, the D/A converter can be either powered on continuously or for a programmable duration (of 256 quarter-bits by default). The later option is for power saving.

In immediate mode, the MCU can directly control the AFC value without event triggering. The value written by the MCU immediately takes effect. In this mode, the D/A converter should be powered on continuously. When entering timer-triggered mode from immediate mode (by setting flag I_MODE in the register AFC_CON to be 0), the D/A converter will be kept powered on for a programmable duration (of 256 quarter-bits by default) if the next TDMA_AFC has been not pulsed in the duration. The duration will be prolonged upon receiving next events.

The two modes provide flexibility when controlling the oscillator. The 13-bit DAC proves to be monotonic. Associated with proper AFC algorithm, baseband processor achieves good tracking of the RF channels and the highest performance.

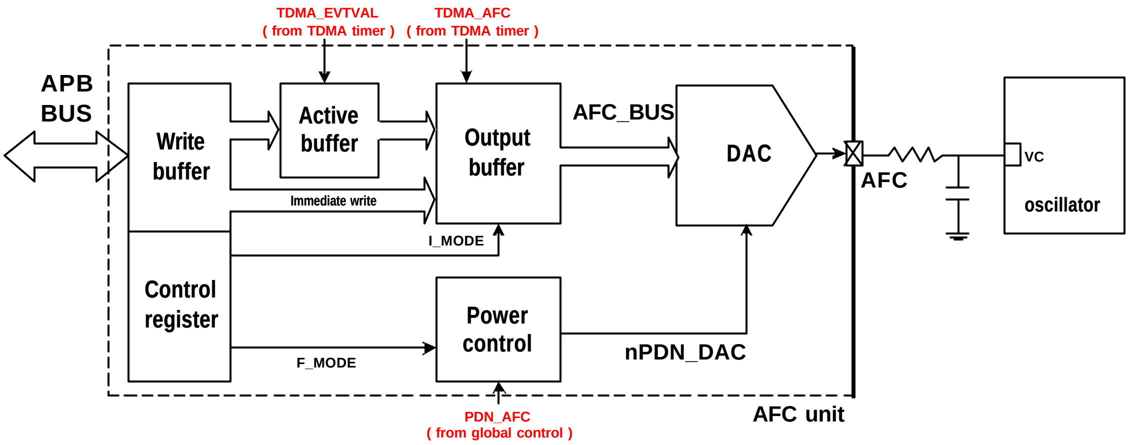

Figure 59 The block diagram of the AFC controller

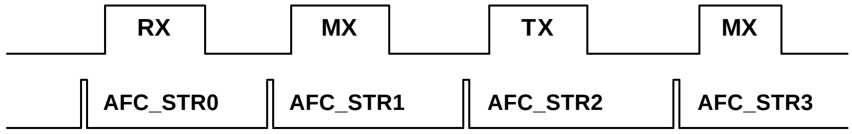

Figure 60 The timing diagram of the AFC controller

8.4.2 Register Definitions

AFC+0000h AFC control register AFC_CON

Bit	15	14	13	12	11	10	9	8	7	6	5	4	3	2	1	0
Name													RDACT	F_MODE	FETENV	I_MODE
Type													R/W	R/W	R/W	R/W
Reset													0	0	0	0

Four control modes are defined and can be controlled through the AFC control register. F_MODE enables the force power up mode. FETENV enables the directly writing operation to the active buffer. I_MODE enables the immediate mode. RDACT enables the directly reading operation from the active buffer.

RDACT The flag enables the directly reading operation from the active buffer. Note the control flag is only applicable to the four data buffer including AFC_DAT0, AFC_DAT1, AFC_DAT2, and AFC_DAT3.

0 APB read from the write buffer.

1 APB read from the active buffer.

FETENV The flag enables the directly writing operation to the active buffer. Note the control flag is only applicable to the for data buffer including AFC_DAT0, AFC_DAT1, AFC_DAT2, and AFC_DAT3.

- **0** APB write to the write buffer.
- **1** APB write to the active buffer.

F_MODE The flag enables the force power up mode.

- **0** The force power up mode is not enabled.
- **1** The force power up mode is enabled.

I_MODE The flag enables the immediate mode. To enable the immediate mode also enable the force power up mode.

- **0** The immediate mode is not enabled.
- **1** The immediate mode is enabled.

AFC +0004h AFC data register 0 AFC_DAT0

Bit	15	14	13	12	11	10	9	8	7	6	5	4	3	2	1	0
Name				AFCD												
Type				R/W												

The register stores the AFC value for the event 0 triggered by the TDMA timer in timer-triggered mode. When RDACT or FETENV is set, the data transfer operates on the active buffer. On the contrary, when RDACT or FETENV is not set, the data transfer operates on the write buffer.

There are four registers (AFC_DAT0, AFC_DAT1, AFC_DAT2, AFC_DAT3) of the same type, which for each corresponds to the event triggered by the TDMA timer. The four registers are summarized in **Table 39**.

AFC_DAT0 is particularly used for the immediate mode. In this mode, only the control value is the AFC_DAT0 write buffer is used to control the D/A converter. Unlike in timer-triggered mode, the control value in AFC_DAT0 write buffer could bypass the active buffer stage and is directly coupled to the output buffer in immediate mode. Intended to use immediate mode, it's recommended to program the AFC_DAT0 in advance and then enable the immediate mode by setting the flag I_MODE in the register AFC_CON.

The register AFC_DATA0, AFC_DAT1, AFC_DAT2, and AFC_DAT3 have no initial values. So it has to be programmed before any AFC event takes place. However, the AFC value for the D/A converter, i.e., the output buffer value, is initially 0 right after power up before any event takes place.

AFCD The field is the AFC sample for the D/A converter.

Register Address	Register Function	Acronym
AFC +0004h	AFC control value 0	AFC_DAT0
AFC +0008h	AFC control value 1	AFC_DAT1
AFC +000Ch	AFC control value 2	AFC_DAT2
AFC +0010h	AFC control value 3	AFC_DAT3

Table 39 AFC Data Registers

AFC +0014h AFC power up period AFC_PUPER

Bit	15	14	13	12	11	10	9	8	7	6	5	4	3	2	1	0
Name				PU_PER												
Type				R/W												
Reset				ff												

The register stores the AFC power up period, which is 13 bits width. The value ranges from 0 to 8191. If the flag I_MODE or F_MODE is set, this register has no effect since the D/A converter is powered up continuously. If the flag I_MODE and F_MODE is not set, the register controls the power up duration of the D/A converter. During that period, the signal nPDN_DAC in **Figure 59** is set to be 1.

PU_PER The field stores the AFC power up period. After hardware power up, the field is initialized as 255.

9 Baseband Front End

Baseband Front End is a modem interface between TX/RX mixed-signal modules and digital signal processor (DSP). We can divide this block into two parts (see **Figure 61**). The first is the uplink (transmitting) path, which converts bit-stream from DSP into digital in-phase (I) and quadrature (Q) signals for TX mixed-signal module. The second part is the downlink (receiving) path, which receives digital in-phase (I) and quadrature (Q) signals from RX mixed-signal module, performs FIR filtering and then sends results to DSP. **Figure 61** illustrates interconnection around Baseband Front End. In the figure the shadowed blocks compose Baseband Front End. The uplink path is mainly composed of GMSK Modulator and uplink parts of Baseband Serial Ports, and the downlink path is mainly composed of RX digital FIR filter and downlink parts of Baseband Serial Ports. Baseband Serial Ports is a serial interface used to communicate with DSP. In addition, there is a set of control registers in Baseband Front End that is intended for control of TX/RX mixed-signal modules, inclusive of calibration of DC offset and gain mismatch of downlink analog-to-digital (A/D) converters as well as uplink digital-to-analog (D/A) converters in TX/RX mixed-signal modules. The timing of bit streaming through Baseband Front End is completely under control of TDMA timer. Usually only either of uplink and downlink paths is active at one moment. However, both of the uplink and downlink paths will be active simultaneously when Baseband Front End is in loopback mode.

When either of TX windows in TDMA timer is opened, the uplink path in Baseband Front End will be activated. Accordingly components on the uplink path such as GMSK Modulator will be powered on, and then TX mixed-signal module is also powered on. The subblock Baseband Serial Ports will sink TX data bits from DSP and then forward them to GMSK Modulator. The outputs from GMSK Modulator are sent to TX mixed-signal module in format of I/Q signals. Finally D/A conversions are performed in TX mixed-signal module and the output analog signal is output to RF module.

Similarly, while either of RX windows in TDMA timer is opened, the downlink path in Baseband Front End will be activated. Accordingly components on the downlink path such as RX mixed-signal module and RX digital FIR filter are then powered on. First A/D conversions are performed in RX mixed-signal module, and then the results in format of I/Q signals are sourced to RX digital FIR filter. Low-Pass filtering is performed in RX digital FIR filter. Finally the results will be sourced to DSP through Baseband Serial Ports.

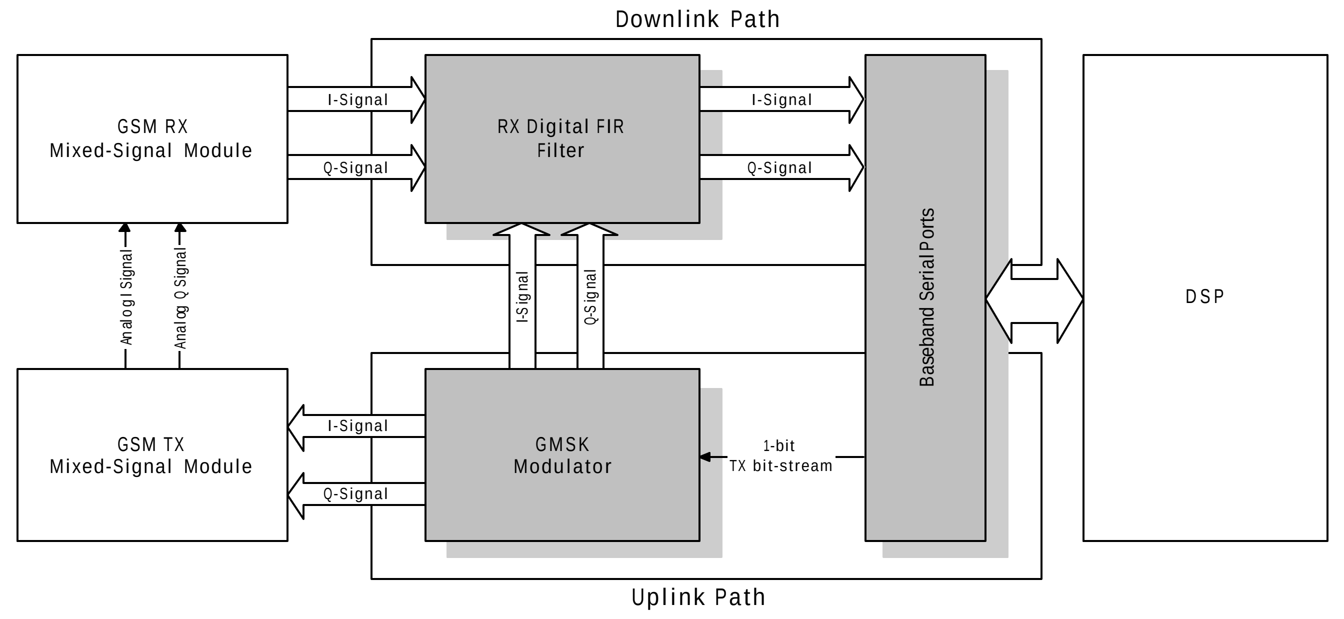

Figure 61 Block Diagram Of Baseband Front End

9.1 Baseband Serial Ports

9.1.1 General Description

Baseband Front End communicates with DSP through the sub block of Baseband Serial Ports. Baseband Serial Ports interfaces with DSP in serial manner. It implies that DSP must be configured carefully in order to have Baseband Serial Ports cooperate with DSP core correctly.

If downlink path is programmed in bypass-filter mode (**NOT**bypass-filter loopback mode), behavior of Baseband Serial Ports will completely be different from that in normal function mode. The special mode is for testing purpose. Please see the subsequent section of Downlink Path for details.

TX and RX windows are under control of TDMA timer. Please refer to functional specification of TDMA timer for the details how to open/close a TX/RX window. Opening/Closing of TX/RX windows has two major effects on Baseband Front End. They are power on/off of corresponding components and data souring/sinking. It is worth noticing that Baseband Serial Ports is only intended for sinking TX data from DSP or sourcing data to DSP. It does not involve power on/off of TX/RX mixed-signal modules.

As far as downlink path is concerned, if a RX window is opened by TDMA timer Baseband Front End will have RX mixed-signal module proceed to make A/D conversion, RX digital filter proceed to perform filtering and Baseband Serial Ports be activated to source data from RX digital filter to DSP no matter the data is meaningful or not. However, the interval between the moment that RX mixed-signal module is powered on and the moment that data proceed to be dumped by Baseband Serial Ports can be well controlled in TDMA timer. Lets denote as RX enable window the interval that RX mixed-signal module is powered on and denote as RX dump window the interval that data is dumped by Baseband Serial Ports. If the first samples from RX digital filter desire to be discarded, the corresponding RX enable window must cover the corresponding RX dump window. Notes that RX dump windows always win over RX enable windows. It means that a RX

dump window will always raise a RX enable window. RX enable windows can be raised by TDMA timer or by programming RX power-down bit in global control registers to be ‘0’. It is useful in debugging environment.

Similarly, a TX dump window refers to the interval that Baseband Serial Ports sinks data from DSP on uplink path and a TX enable window refers to the interval that TX mixed-signal module is powered on. A TX window controlled by TDMA timer involves a TX dump window and a TX enable window simultaneously. The interval between the moment that TX mixed-signal module is powered on and the moment that data proceed to be forwarded from DSP to GMSK modulator by Baseband Serial Ports can be well controlled in TDMA timer. TX dump windows always win over TX enable windows. It means that a TX dump window will always raise a TX enable window. TX enable windows can be raised by TDMA timer or by programming TX power-down bit in global control registers to be ‘0’. It is useful in debugging environment.

Accordingly, Baseband Serial Ports are only under control of TX/RX dump window. Note that if TX/RX dump window is not integer multiples of bit-time it will be extended to be integer multiples of bit-time. For example, if TX/RX dump window has interval of 156.25 bit-times then it will be extended as 157 bit-times in Baseband Serial Ports.

9.1.2 Register Definitions

BFE+0000h Base-band Common Control Register BFE_CON

Bit	15	14	13	12	11	10	9	8	7	6	5	4	3	2	1	0
Name																BCIEN
Type																R/W
Reset																0

This register is for common control of Baseband Front End. It consists of ciphering encryption control.

BCIEN The bit is for ciphering encryption control. If the bit is set to ‘1’, XOR will performed on some TX bits (payload of Normal Burst) and ciphering pattern bit from DSP, and then the result is forwarded to GMSK Modulator. Meanwhile, Baseband Front End will generate signals to drive DSP ciphering process produce corresponding ciphering pattern bits if the bit is set to ‘1’. If the bit is set to ‘0’, the TX bit from DSP will be forwarded to GMSK modulator directly. Baseband Front End will not activate DSP ciphering process.

- **0** Disable ciphering encryption.
- **1** Enable ciphering encryption.

BFE +0004h Base-band Common Status Register BFE_STA

Bit	15	14	13	12	11	10	9	8	7	6	5	4	3	2	1	0
Name													BULFS	BULEN	BDLFS	BDLEN
Type													RO	RO	RO	RO
Reset													0	0	0	0

This register indicates status of Baseband Front End. Under control of TDMA timer, Baseband Front End can be driven in several statuses. If downlink path is enabled, then the bit BDLEN will be ‘1’. Otherwise the bit BDLEN will be ‘0’. If downlink parts of Baseband Serial Ports is enabled, the bit BDLFS will be ‘1’. Otherwise the bit BDLFS will be ‘0’. If uplink path is enabled, then the bit BULEN will be ‘1’. Otherwise the bit BULEN will be 0. If uplink parts of Baseband Serial Ports is enabled, the bit BULFS will be ‘1’. Otherwise the bit BULFS will be ‘0’. Once downlink path is enabled, RX mixed-signal module will also be powered on. Similarly, once uplink path is enabled, TX mixed-signal module will also be powered on. Furthermore, enabling Baseband Serial Ports for downlink path refers to dumping results from RX digital FIR filter to DSP. Similarly, enabling Baseband Serial Ports for uplink path refers to forwarding TX bit from DSP to GMSK

modulator. BDLEN stands for "**B**aseband **D**own**L**ink **EN**able". BULEN stands for "**B**aseband **U**p**L**ink **EN**able". BDLFS stands for "**B**aseband **D**own**L**ink **F**rame**S**ync". BULFS stands for "**B**aseband **U**p**L**ink **F**rame**S**ync".

BDLEN Indicate if downlink path is enabled.

- **0** Disabled
- **1** Enabled

BDLFS Indicate if Baseband Serial Ports for downlink path is enabled.

- **0** Disabled
- **1** Enabled

BULEN Indicate if uplink path is enabled.

- **0** Disabled
- **1** Enabled

BULFS Indicate if Baseband Serial Ports for uplink path is enabled.

- **0** Disabled
- **1** Enabled

9.2 Downlink Path (RX Path)

9.2.1 General Description

On downlink path, the subblock between RX mixed-signal module and Baseband Serial Ports is RX Path. It mainly consists of a digital FIR filter, two sets of multiplexing paths for loopback modes, interface for RX mixed-signal module and interface for Baseband Serial Ports. The block diagram is shown in **Figure 62**.

While RX enable windows are opened, RX Path will issue control signals to have RX mixed-signal module proceed to make A/D conversion. As each conversion is finished, one set of I/Q signals will be latched. There exists a digital FIR filter for these I/Q signals. The result of filtering will be dumped to Baseband Serial Ports whenever RX dump windows are opened.

In addition to normal function, there are two loopback modes in RX Path. One is bypass-filter loopback mode, and the other is through-filter loopback mode. They are intended for verification of DSP firmware and hardware. The bypass-filter loopback mode refers to that RX digital FIR filter is not on the loopback path. However, the through-filter loopback mode refers to that RX digital FIR filter is on the loopback path.

The I/Q swap functionality is used to swap I/Q channel signals from RX mixed-signal module before they are latched into RX digital FIR filter. It is intended to provide flexibility for I/Q connection with RF modules.

There is a special data path not shown in **Figure 62**. It is a data path from RX mixed-signal module to Baseband Serial Ports. If downlink path is programmed in "Bypass RX digital FIR filter" mode, ADC outputs out of RX mixed-signal module will be directed into Baseband Serial Ports directly. Therefore these data can be dumped into DSP and RX FIR filtering will not be performed on them. Limited by bandwidth of the serial interface between Baseband Serial Ports and DSP, only ADC outputs which are from either I-channel or Q-channel ADC can be dumped into DSP. Both of I- and Q-channel ADC outputs cannot be dumped simultaneously. Which channel will be dumped is controlled by the register bit SWAP of the register **RX_CFG** when downlink path is programmed in "Bypass RX digital FIR filter" mode. See register definition below for details. The mode is for measurement of performance of A/D converters in RX mixed-signal module.

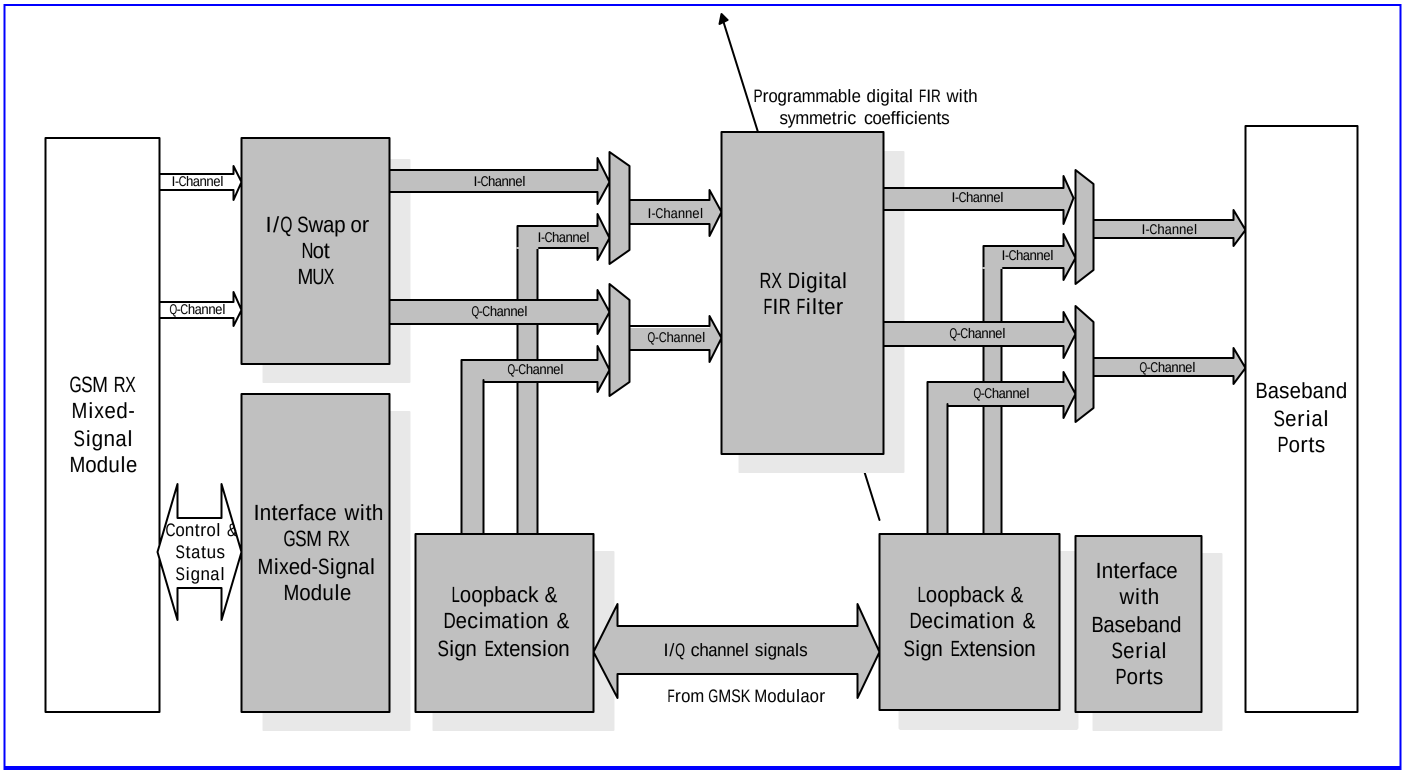

Figure 62 Block Diagram Of RX Path

9.2.2 Register Definitions

BFE +0010h RX Configuration Register RX_CFG

Bit	15	14	13	12	11	10	9	8	7	6	5	4	3	2	1	0
Name	LPDN														BYPFLTR	SWAP
Type	R/W														R/W	R/W
Reset	0000														0	0

This register is for configuration of downlink path, inclusive of configuration of RX mixed-signal module and RX path in Baseband Front End.

SWAP The register bit is for control of whether I/Q channel signals need swap before they are input to Baseband Front End. It provides flexibility of connection of I/Q channel signals between RF module and baseband module. The register bit has another purpose when the register bit “BYPFLTR” is set to 1. Please see description for the register bit “BYPFLTR”.

- **0** I- and Q-channel signals are not swapped
- **1** I- and Q-channel signals are swapped

BYPFLTR Bypass RX FIR filter control. The register bit is used to configure Baseband Front End in the state called “Bypass RX FIR filter state” or not. Once the bit is set to ‘1’, RX FIR filter will be bypassed. That is, ADC outputs of RX mixed-signal module that are 11-bit resolution and at sampling rate of 1.083MHz can be dumped into DSP by Baseband Serial Ports and RX FIR filtering will not be performed on them. Limited by bandwidth of the serial interface between Baseband Serial Ports and DSP, these ADC outputs are all from either I-channel or Q-channel ADC. Both of I- and Q-channel ADC outputs cannot be dumped simultaneously. When the bit is set to ‘1’ and the

register bit “SWAP” is set to ‘0’, ADC outputs of I-channel will be dumped. When the bit is set to ‘1’ and the register bit “SWAP” is set to ‘1’, ADC outputs of Q-channel will be dumped.

0 Not bypass RX FIR filter

1 Bypass RX FIR filter

LPDN Late power down control. RX mixed-signal module needs two power down signals. There must exist some delay between them. The register field is used to control the late-arriving power-down signal.

0000 The delay between two power-down signals is one 13 MHz period.

0001 The delay between two power-down signals is two 13 MHz period.

0010 The delay between two power-down signals is three 13 MHz period.

…

0001 The delay between two power-down signals is 256 13 MHz period.

BFE +0014h RX Control Register RX_CON

Bit	15	14	13	12	11	10	9	8	7	6	5	4	3	2	1	0
Name															BLPEN[1:0]	
Type															R/W	
Reset															0	

This register is for control of downlink path, inclusive of control of RX mixed-signal module and RX path in Baseband Front End module.

BLPEN The register field is for loopback configuration selection in Baseband Front End.

00 Configure Baseband Front End in normal function mode

01 Configure Baseband Front End in bypass-filter loopback mode

10 Configure Baseband Front End in through-filter loopback mode

11 Reserved

BFE +0020h RX Digital FIR Filter Coefficient Register 0 RX_FIR_COEF0

Bit	15	14	13	12	11	10	9	8	7	6	5	4	3	2	1	0
Name							D9	D8	D7	D6	D5	D4	D3	D2	D1	D0
Type							R/W	R/W	R/W	R/W	R/W	R/W	R/W	R/W	R/W	R/W
Reset							0	0	0	0	0	0	0	0	0	0

The register is for RX digital FIR filter coefficient 0. It is coded in 2’s complement. That is, its maximum is 255 and its minimum is –256. It will be applied on the latest and the oldest taps of 31 taps. The equivalent process flow of RX digital FIR filtering is shown in **Figure 63**.

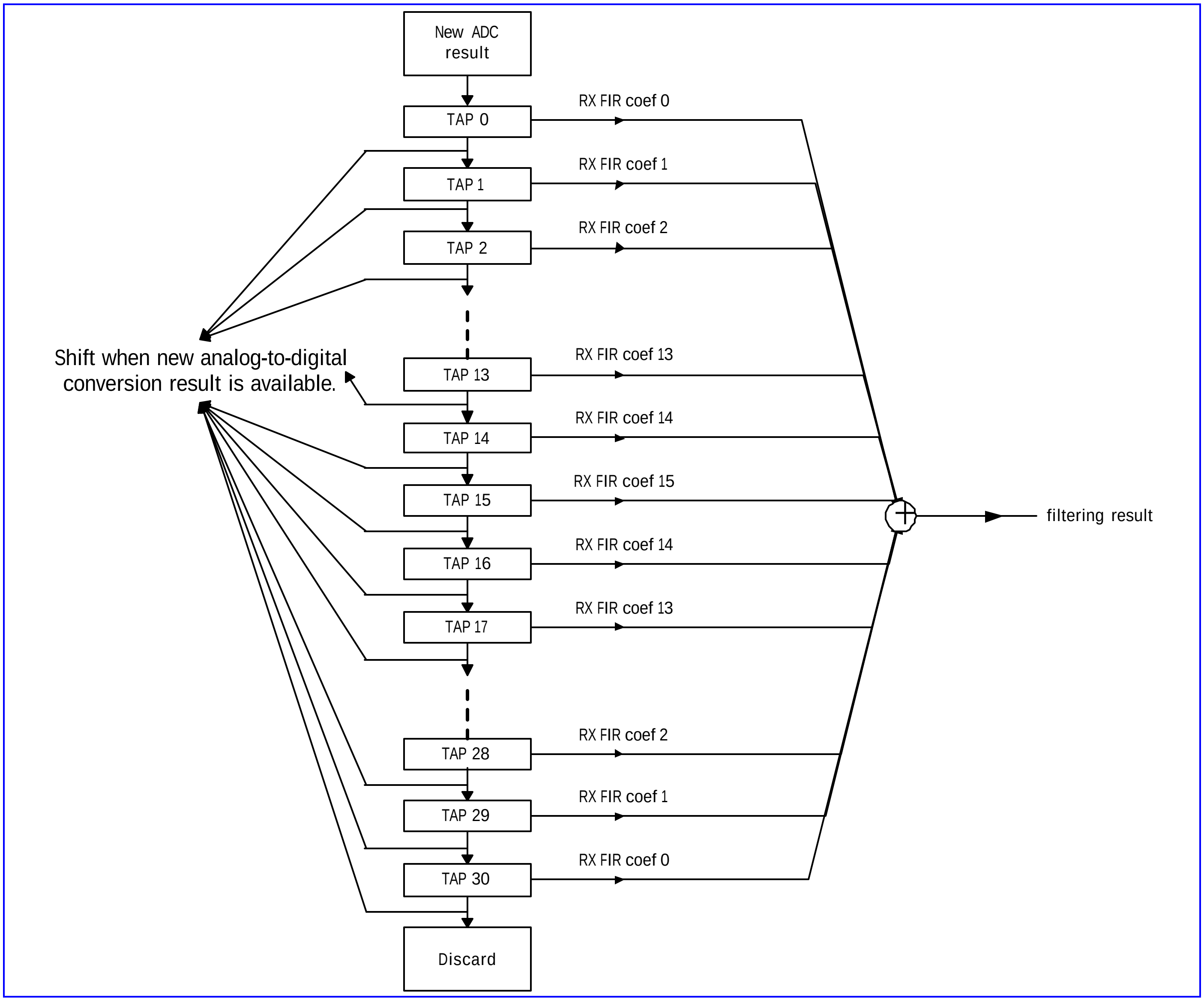

Figure 63 Equivalent Process Flow Of RX Digital FIR Filtering

BFE +0024h RX Digital FIR Filter Coefficient Register 1 RX_FIR_COEF1

Bit	15	14	13	12	11	10	9	8	7	6	5	4	3	2	1	0
Name							D9	D8	D7	D6	D5	D4	D3	D2	D1	D0
Type							R/W	R/W	R/W	R/W	R/W	R/W	R/W	R/W	R/W	R/W
Reset							0	0	0	0	0	0	0	0	0	0

The register is for RX digital FIR filter coefficient 1. It is coded in 2’s complement. That is, its maximum is 255 and its minimum is –256.

BFE +0028h RX Digital FIR Filter Coefficient Register 2 RX_FIR_COEF2

Bit	15	14	13	12	11	10	9	8	7	6	5	4	3	2	1	0
Name							D9	D8	D7	D6	D5	D4	D3	D2	D1	D0
Type							R/W	R/W	R/W	R/W	R/W	R/W	R/W	R/W	R/W	R/W
Reset							0	0	0	0	0	0	0	0	0	0

The register is for RX digital FIR filter coefficient 2. It is coded in 2's complement. That is, its maximum is 255 and its minimum is –256.

BFE +002Ch RX Digital FIR Filter Coefficient Register 3 RX_FIR_COEF3

Bit	15	14	13	12	11	10	9	8	7	6	5	4	3	2	1	0
Name							D9	D8	D7	D6	D5	D4	D3	D2	D1	D0
Type							R/W	R/W	R/W	R/W	R/W	R/W	R/W	R/W	R/W	R/W
Reset							0	0	0	0	0	0	0	0	0	0

The register is for RX digital FIR filter coefficient 3. It is coded in 2's complement. That is, its maximum is 255 and its minimum is –256.

BFE +0030h RX Digital FIR Filter Coefficient Register 4 RX_FIR_COEF4

Bit	15	14	13	12	11	10	9	8	7	6	5	4	3	2	1	0
Name							D9	D8	D7	D6	D5	D4	D3	D2	D1	D0
Type							R/W	R/W	R/W	R/W	R/W	R/W	R/W	R/W	R/W	R/W
Reset							0	0	0	0	0	0	0	0	0	0

The register is for RX FIR filter coefficient 4. It is coded in 2's complement. That is, its maximum is 255 and its minimum is –256.

BFE +0034h RX Digital FIR Filter Coefficient Register 5 RX_FIR_COEF5

Bit	15	14	13	12	11	10	9	8	7	6	5	4	3	2	1	0
Name							D9	D8	D7	D6	D5	D4	D3	D2	D1	D0
Type							R/W	R/W	R/W	R/W	R/W	R/W	R/W	R/W	R/W	R/W
Reset							0	0	0	0	0	0	0	0	0	0

The register is for RX digital FIR filter coefficient 5. It is coded in 2's complement. That is, its maximum is 255 and its minimum is –256.

BFE +0038h RX Digital FIR Filter Coefficient Register 6 RX_FIR_COEF6

Bit	15	14	13	12	11	10	9	8	7	6	5	4	3	2	1	0
Name							D9	D8	D7	D6	D5	D4	D3	D2	D1	D0
Type							R/W	R/W	R/W	R/W	R/W	R/W	R/W	R/W	R/W	R/W
Reset							0	0	0	0	0	0	0	0	0	0

The register is for RX digital FIR filter coefficient 6. It is coded in 2's complement. That is, its maximum is 255 and its minimum is –256.

BFE +003Ch RX Digital FIR Filter Coefficient Register 7 RX_FIR_COEF7

Bit	15	14	13	12	11	10	9	8	7	6	5	4	3	2	1	0
Name							D9	D8	D7	D6	D5	D4	D3	D2	D1	D0
Type							R/W	R/W	R/W	R/W	R/W	R/W	R/W	R/W	R/W	R/W
Reset							0	0	0	0	0	0	0	0	0	0

The register is for RX digital FIR filter coefficient 7. It is coded in 2's complement. That is, its maximum is 255 and its minimum is –256.

BFE +0040h RX Digital FIR Filter Coefficient Register 8 RX_FIR_COEF8

Bit	15	14	13	12	11	10	9	8	7	6	5	4	3	2	1	0
Name							D9	D8	D7	D6	D5	D4	D3	D2	D1	D0

Type							R/W	R/W	R/W	R/W	R/W	R/W	R/W	R/W	R/W	R/W
Reset							0	0	0	0	0	0	0	0	0	0

The register is for RX digital FIR filter coefficient 8. It is coded in 2's complement. That is, its maximum is 255 and its minimum is –256.

BFE +0044h RX Digital FIR Filter Coefficient Register 9 RX_FIR_COEF9

Bit	15	14	13	12	11	10	9	8	7	6	5	4	3	2	1	0
Name							D9	D8	D7	D6	D5	D4	D3	D2	D1	D0
Type							R/W	R/W	R/W	R/W	R/W	R/W	R/W	R/W	R/W	R/W
Reset							0	0	0	0	0	0	0	0	0	0

The register is for RX digital FIR filter coefficient 9. It is coded in 2's complement. That is, its maximum is 255 and its minimum is –256.

BFE +0048h RX Digital FIR Filter Coefficient Register 10 RX_FIR_COEF10

Bit	15	14	13	12	11	10	9	8	7	6	5	4	3	2	1	0
Name							D9	D8	D7	D6	D5	D4	D3	D2	D1	D0
Type							R/W	R/W	R/W	R/W	R/W	R/W	R/W	R/W	R/W	R/W
Reset							0	0	0	0	0	0	0	0	0	0

The register is for RX digital FIR filter coefficient 10. It is coded in 2's complement. That is, its maximum is 255 and its minimum is –256.

BFE +004Ch RX Digital FIR Filter Coefficient Register 11 RX_FIR_COEF11

Bit	15	14	13	12	11	10	9	8	7	6	5	4	3	2	1	0
Name							D9	D8	D7	D6	D5	D4	D3	D2	D1	D0
Type							R/W	R/W	R/W	R/W	R/W	R/W	R/W	R/W	R/W	R/W
Reset							0	0	0	0	0	0	0	0	0	0

The register is for RX digital FIR filter coefficient 11. It is coded in 2's complement. That is, its maximum is 255 and its minimum is –256.

BFE +0050h RX Digital FIR Filter Coefficient Register 12 RX_FIR_COEF12

Bit	15	14	13	12	11	10	9	8	7	6	5	4	3	2	1	0
Name							D9	D8	D7	D6	D5	D4	D3	D2	D1	D0
Type							R/W	R/W	R/W	R/W	R/W	R/W	R/W	R/W	R/W	R/W
Reset							0	0	0	0	0	0	0	0	0	0

The register is for RX digital FIR filter coefficient 12. It is coded in 2's complement. That is, its maximum is 255 and its minimum is –256.

BFE +0054h RX Digital FIR Filter Coefficient Register 13 RX_FIR_COEF13

Bit	15	14	13	12	11	10	9	8	7	6	5	4	3	2	1	0
Name							D9	D8	D7	D6	D5	D4	D3	D2	D1	D0
Type							R/W	R/W	R/W	R/W	R/W	R/W	R/W	R/W	R/W	R/W
Reset							0	0	0	0	0	0	0	0	0	0

The register is for RX digital FIR filter coefficient 13. It is coded in 2's complement. That is, its maximum is 255 and its minimum is –256.

BFE +0058h RX Digital FIR Filter Coefficient Register 14 RX_FIR_COEF14

Bit	15	14	13	12	11	10	9	8	7	6	5	4	3	2	1	0
Name							D9	D8	D7	D6	D5	D4	D3	D2	D1	D0
Type							R/W	R/W	R/W	R/W	R/W	R/W	R/W	R/W	R/W	R/W
Reset							0	0	0	0	0	0	0	0	0	0

The register is for RX digital FIR filter coefficient 14. It is coded in 2's complement. That is, its maximum is 255 and its minimum is –256.

BFE +005Ch RX Digital FIR Filter Coefficient Register 15 RX_FIR_COEF15

Bit	15	14	13	12	11	10	9	8	7	6	5	4	3	2	1	0
Name							D9	D8	D7	D6	D5	D4	D3	D2	D1	D0
Type							R/W	R/W	R/W	R/W	R/W	R/W	R/W	R/W	R/W	R/W
Reset							0	0	0	0	0	0	0	0	0	0

The register is for RX digital FIR filter coefficient 15. It is coded in 2's complement. That is, its maximum is 255 and its minimum is –256.

9.3 Uplink Path (TX Path)

9.3.1 General Description

The purpose of the uplink path inside Baseband Front End is to sink TX symbols, one bit for each symbol, from DSP, then perform GMSK modulation on them, then perform offset cancellation on I/Q digital signals out of GMSK modulator, and finally control TX mixed-signal module to make D/A conversion on I/Q signals out of GMSK Modulator with offset cancellation. Accordingly, the uplink path is composed of uplink parts of Baseband Serial Ports, GSM Encryptor, GMSK Modulator and Offset Cancellation. The block diagram of uplink path is shown in **Figure 64**. On uplink path, the content of a burst, including tail bits, data bits, and training sequence bits is sent from DSP. Translated by GMSK Modulator, these bits will become I/Q digital signals. Offset cancellation will be performed on these I/Q digital signals to compensate offset error of D/A converters (DAC) in TX mixed-signal module. Finally the generated I/Q digital signals will be input to TX mixed-signal module that contains two DAC for I/Q signal respectively. The details of each subblock will be described in subsequent sections.

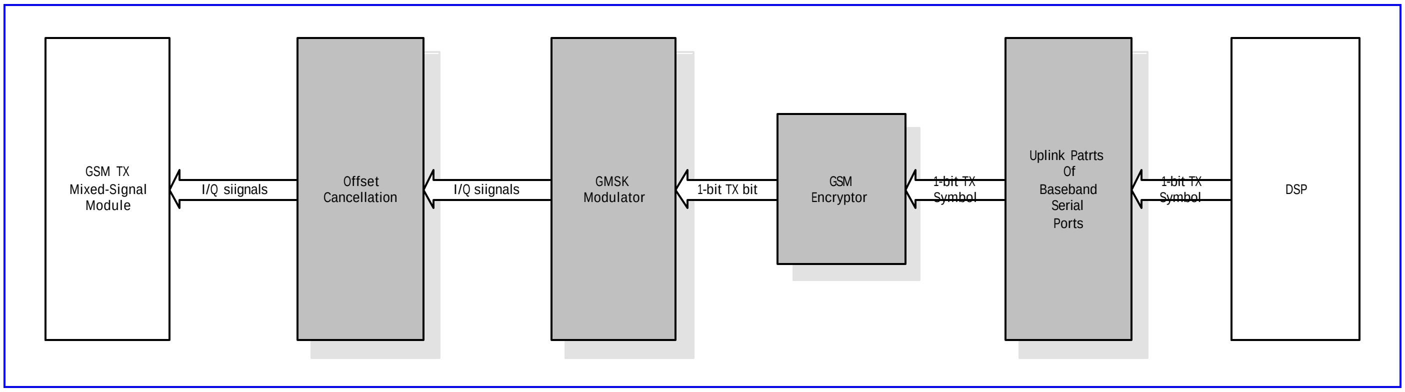

Figure 64 Block Diagram Of Uplink Path

TDMA timer having a quarter-bit timing accuracy gives the timing windows for uplink operation. Uplink operation is controlled by TX enable window and TX dump window of TDMA timer. Usually TX enable window is opened earlier than TX dump window. When TX enable window of TDMA timer is opened, uplink path in Baseband Front End will power on GSK TX mixed-signal module and thus has it drive valid outputs to RF module. However, uplink parts of Baseband Serial Ports still don't sink data from DSP through the serial interface between Baseband Serial Ports and DSP until now. Uplink parts of Baseband Serial Ports will not sink data from DSP until TX dump window of TDMA timer is opened.

9.3.2 Register Definitions

BFE +0060h TX Configuration Register TX_CFG

Bit	15	14	13	12	11	10	9	8	7	6	5	4	3	2	1	0
Name																APNDEN
Type																R/W
Reset																0

This register is for configuration of uplink path, inclusive of configuration of TX mixed-signal module and TX path in Baseband Front End.

APNDEN Appending Bits Enable. The register bit is used to control the ending scheme of GMSK modulation.

0 Suitable for GPRS. If a TX enable window contains several TX dump window, then GMSK modulator will still output in the intervals between two TX dump window and all 1's will be fed into GMSK modulator. **Note that when the bit is set to '0', the interval between the moment at which TX enable window is activated and the moment at which TX dump window is activated must be multiples of one bit time.**

1 Suitable for GSM only. After a TX dump window, GMSK modulator will only output for some bit time.

BFE +0064h TX Control Register TX_CON

Bit	15	14	13	12	11	10	9	8	7	6	5	4	3	2	1	0
Name															CALRCEN	IQSWP
Type															R/W	R/W
Reset															0	0

This register is for control of uplink path, inclusive of control of TX mixed-signal module and TX path in Baseband Front End.

CALRCEN Calibration for TX low-pass-filter Enable. The procedure to make calibration processing for smoothing filter in BBTX mixed-signal module is as follows:

1. Write '1' to the register bit CARLC in the register TX_CON of Baseband Front End in order to activate clock required for calibration process. Initiate calibration process.
2. Write '1' to the register bit STARTCALRC of Analog Chip Interface. Start calibration process.
3. Read the register bit CALRCDONE of Analog Chip Interface. If read as '1', then calibration process finished. Otherwise repeat the step.
4. Write '0' to the register bit STARTCALRC of Analog Chip Interface. Stop calibration process.
5. Write '0' to the register bit CARLC in the register TX_CON of Baseband Front End in order to deactivate clock required for calibration process. Terminate calibration process.
6. The result of calibration process can be read from the register field CALRCOUT of the register BBTX_AC_CON1 of Analog Chip Interface. Software can set the value to the register field CALRCSEL for 3-dB cutoff frequency selection of smoothing filter in DAC of BBTX of Analog Chip Interface.

0 Dectivate clock required for calibration process.
1 Activate clock required for calibration process.

IQSWP The register bit is for control of I/Q swapping. When the bit is set to '1', phase on I/Q plane will rotate in inverse direction.

0: I and Q are not swapped.
1: I and Q are swapped.

BFE +0068h TX I/Q Channel Offset Compensation Register TX_OFF

Bit	15	14	13	12	11	10	9	8	7	6	5	4	3	2	1	0
Name			OFFQ[5:0]								OFFI[5:0]					
Type			R/W								R/W					
Reset			000000								000000					

The register is for offset cancellation of I-channel DAC in TX mixed-signal module. It is for compensation of offset error caused by I/Q-channel DAC in TX mixed-signal module. It is coded in 2's complement, that is, with maximum 31 and minimum −32.

OFFI Value of offset cancellation for I-channel DAC in TX mixed-signal module
OFFQ Value of offset cancellation for Q-channel DAC in TX mixed-signal module

10 Timing Generator

Timing is the most critical issue in GSM/GPRS applications. The TDMA timer provides a simple interface for the MCU to program all the timing-related events for receive event control, transmit event control and the timing adjustment. Detailed descriptions are seen in Section 10.1.

In pause mode, the 13MHz reference clock may be switched off temporarily for the purpose of power saving and the synchronization to the base-station is maintained by using a low power 32KHz crystal oscillator. The 32KHz oscillator is not accurate and therefore it should be calibrated prior to entering pause mode. The calibration sequence, pause begin sequence and the wake up sequence are described in Section 10.2.

10.1 TDMA timer

The TDMA timer unit is composed of three major blocks: Quarter bit counter, Signal generator and Event registers.

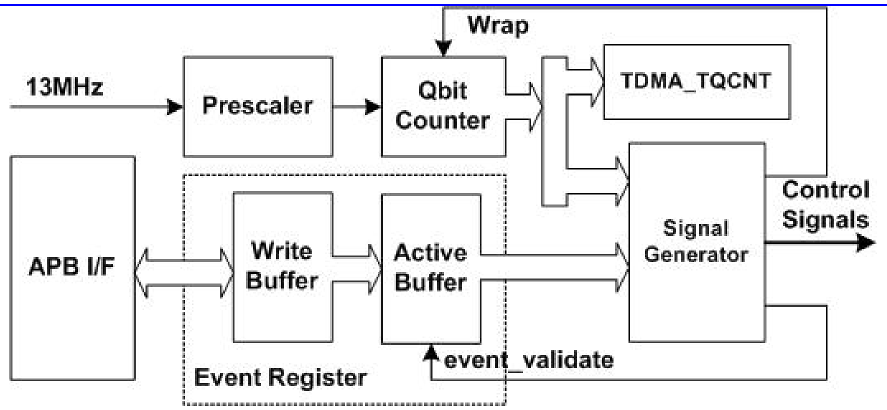

Figure 65 The block diagram of TDMA timer

By default, the quarter-bit counter continuously counts from 0 to the wrap position. In order to apply to cell synchronization and neighboring cell monitoring, the wrap position can be changed by the MCU to shorten or lengthen a TDMA frame. The wrap position is held in the TDMA_WRAP register and the current value of the TDMA quarter bit counter may be read by the MCU via the TDMA_TQCNT register.

The signal generator handles the overall comparing and event-generating processes. When a match is occurred between the quarter bit counter and the event register, a predefined control signal is generated. These control signals may be used for on-chip and off-chip purpose. Signals that change state more than once per frame make use of more than one event register.

The event registers are programmed to contain the quarter bit position of the event to be occurred. The event registers are double buffered. The MCU writes into the first register, and the event TDMA_EVTVAL transfers the data from the write buffer to the active buffer, which is used by the signal generator for comparison with the quarter bit count. The TDMA_EVTVAL signal itself may be programmed at any quarter bit position. These event registers could be classified into four groups:

On-chip Control Events

TDMA_EVTVAL

This event allows the data values written by the MCU to pass through to the active buffers.

TDMA_WRAP

TDMA quarter bit counter wrap position. This sets the position at which the TDMA quarter bit counter resets back to zero. The default value is 4999, changing this value will advance or retard the timing events in the frame following the next TDMA_EVTVAL signal.

TDMA_DTIRQ

DSP TDMA interrupt requests. DTIRQ triggers the DSP to read the command from the MCU/DSP Shard RAM to schedule the activities that will be executed in the current frame.

TDMA_CTIRQ1/CTIRQ2

MCU TDMA interrupt requests.

TDMA_AUXADC [1:0]

This signal triggers the monitoring ADC to measure the voltage, current, temperature, device id etc..

TDMA_AFC [3:0]

This signal powers up the automatic frequency control DAC for a programmed duration after this event.

Note: For both MCU and DSP TDMA interrupt requests, these signals are all active Low during one quarter bit duration and they should be used as edge sensitive events by the respective interrupt controllers.

On-chip Receive Events

TDMA_BDLON [5:0]

These registers are a set of six which contain the quarter bit event that initiates the receive window assertion sequence which powers up and enables the receive ADC, and then enables loading the receive data into the receive buffer.

TDMA_BDLOFF [5:0]

These registers are a set of six which contain the quarter bit event that initiates the receive window de-assertion sequence which disables loading the receive data into the receive buffer, and then powers down the receive ADC.

TDMA_RXWIN[5:0]

DSP TDMA interrupt requests. TDMA_RXWIN is usually used to initiate the related RX processing including two modes. In single-shot mode, TDMA_RXWIN is generated when the BRXFS signal is de-asserted. In repetitive mode, TDMA_RXWIN will be generated both regularly with a specific interval after BRXFS signal is asserted and when the BRXFS signal is de-asserted.

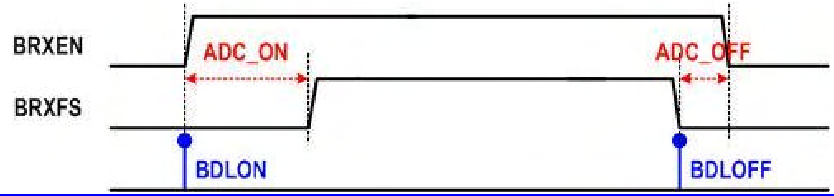

Figure 66 The timing diagram of BRXEN and BRXFS

Note: TDMA_BDLON/OFF event registers, together with TDMA_BDLCON register, generate the corresponding BRXEN and BRXFS window used to power up/down baseband downlink path and control the duration of data transmission to the DSP, respectively.

On-chip Transmit Events

TDMA_APC [6:0]

These registers initiate the loading of the transmit burst shaping values from the transmit burst shaping RAM into the transmit power control DAC.

TDMA_BULON [3:0]

This register contains the quarter bit event that initiates the transmit window assertion sequence which powers up the modulator DAC and then enables reading of bits from the transmit buffer into the GMSK modulator.

TDMA_BULOFF [3:0]

This register contains the quarter bit event that initiates the transmit window de-assertion sequence which disables the reading of bits from the transmit buffer into the GMSK modulator, and then power down the modulator DAC.

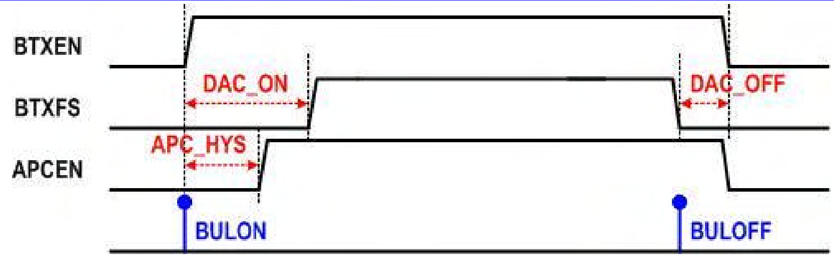

Figure 67 The timing diagram of BTXEN and BTXFS

Note: TDMA_BULON/OFF event registers, together with TDMA_BULCON1, TDMA_BULCON2 register, generate the corresponding BTXEN, BTXFS and APCEN window used to power up/down the baseband uplink path, control the duration of data transmission from the DSP and power up/down the APC DAC, respectively.

Off-chip Control Events

TDMA_BSI [15:0]

The quarter bit positions of these 16 BSI events are used to initiate the transfer of serial words to the transceiver and synthesizer for gain control, frequency adjustment.

TDMA_BPI [21:0]

The quarter bit positions of these 22 BPI events are used to generate changes of state on the output pins to control the external radio components.

10.1.1 Register Definitions

TDMA+0150h Event Enable Register 0 — TDMA_EVTENA0

Bit	15	14	13	12	11	10	9	8	7	6	5	4	3	2	1	0
Name	AFC3	AFC2	AFC1	AFC0	BDL5	BDL4	BDL3	BDL2	BDL1	BDL0				CTIRQ2	CTIRQ1	DTIRQ
Type	R/W	R/W	R/W	R/W	R/W	R/W	R/W	R/W	R/W	R/W				R/W	R/W	R/W
Reset	0	0	0	0	0	0	0	0	0	0				0	0	0

DTIRQ Enable TDMA_DTIRQ

CTIRQ*n* Enable TDMA_CTIRQ*n*

AFC*n* Enable TDMA_AFC*n*

BDL*n* Enable TDMA_BDLON*n* and TDMA_BDLOFF*n*

For all these bits,

- **0** function is disabled
- **1** function is enabled

TDMA+0154h Event Enable Register 1 — TDMA_EVTENA1

Bit	15	14	13	12	11	10	9	8	7	6	5	4	3	2	1	0

Name	GPRS				BUL3	BUL2	BUL1	BUL0		APC6	APC5	APC4	APC3	APC2	APC1	APC0
Type	R/W				R/W	R/W	R/W	R/W		R/W	R/W	R/W	R/W	R/W	R/W	R/W
Reset	0				0	0	0	0		0	0	0	0	0	0	0

APC*n* Enable TDMA_APC*n*

BUL*n* Enable TDMA_BULON*n* and TDMA_BULOFF*n*

For all these bits,

- **0** function is disabled
- **1** function is enabled

TDMA +0158h Event Enable Register 2 TDMA_EVTENA2

Bit	15	14	13	12	11	10	9	8	7	6	5	4	3	2	1	0
Name	BSI15	BSI14	BSI13	BSI12	BSI11	BSI10	BSI9	BSI8	BSI7	BSI6	BSI5	BSI4	BSI3	BSI2	BSI1	BSI0
Type	R/W	R/W	R/W	R/W	R/W	R/W	R/W	R/W	R/W	R/W	R/W	R/W	R/W	R/W	R/W	R/W
Reset	0	0	0	0	0	0	0	0	0	0	0	0	0	0	0	0

BSI*n* BSI event enable control

- **0** Disable TDMA_BSI*n*
- **1** Enable TDMA_BSI*n*

TDMA +015Ch Event Enable Register 3 TDMA_EVTENA3

Bit	15	14	13	12	11	10	9	8	7	6	5	4	3	2	1	0
Name	BPI15	BPI14	BPI13	BPI12	BPI11	BPI10	BPI9	BPI8	BPI7	BPI6	BPI5	BPI4	BPI3	BPI2	BPI1	BPI0
Type	R/W	R/W	R/W	R/W	R/W	R/W	R/W	R/W	R/W	R/W	R/W	R/W	R/W	R/W	R/W	R/W
Reset	0	0	0	0	0	0	0	0	0	0	0	0	0	0	0	0

TDMA+0160h Event Enable Register 4 TDMA_EVTENA4

Bit	15	14	13	12	11	10	9	8	7	6	5	4	3	2	1	0
Name											BPI21	BPI20	BPI19	BPI18	BPI17	BPI16
Type											R/W	R/W	R/W	R/W	R/W	R/W
Reset											0	0	0	0	0	0

BPI*n* BPI event enable control

- **0** Disable TDMA_BPI*n*
- **1** Enable TDMA_BPI*n*

TDMA+0164h Event Enable Register 5 TDMA_EVTENA5

Bit	15	14	13	12	11	10	9	8	7	6	5	4	3	2	1	0
Name															AUX1	AUX0
Type															R/W	R/W
Reset															0	0

AUX Auxiliary ADC event enable control

- **0** Disable Auxiliary ADC event
- **1** Enable Auxiliary ADC event

TDMA +0170h Qbit Timer Offset Control Register TDMA_WRAPOFS

Bit	15	14	13	12	11	10	9	8	7	6	5	4	3	2	1	0
Name															TOI[1:0]	
Type															R/W	
Reset															0	

TOI This register defines the value used to advance the Qbit timer in unit of 1/4 quarter bit; the timing advance will be taken place as soon as the TDMA_EVTVAL is occurred, and it will be cleared automatically.

TDMA +0174h Qbit Timer Biasing Control Register TDMA_REGBIAS

Bit	15	14	13	12	11	10	9	8	7	6	5	4	3	2	1	0
Name			TQ_BIAS[13:0]													
Type			R/W													
Reset			0													

TQ_BIAS This register defines the Qbit offset value which will be added to the registers being programmed. It only takes effects on AFC, BDLON/OFF, BULON/OFF, APC, AUXADC, BSI and BPI event registers.

TDMA +0180h DTX Control Register TDMA_DTXCON

Bit	15	14	13	12	11	10	9	8	7	6	5	4	3	2	1	0
Name													DTX3	DTX2	DTX1	DTX0
Type													R/W	R/W	R/W	R/W

DTX DTX flag is used to disable the associated transmit signals

- **0** BULON0, BULOFF0, APC_EV0 & APC_EV1 are controlled by TDMA_EVTENA1 register
- **1** BULON0, BULOFF0, APC_EV0 & APC_EV1 are disabled

TDMA +0184h Receive Interrupt Control Register TDMA_RXCON

Bit	15	14	13	12	11	10	9	8	7	6	5	4	3	2	1	0
Name	MOD5	MOD4	MOD3	MOD2	MOD1	MOD0	RXINTCNT[9:0]									
Type	R/W	R/W	R/W	R/W	R/W	R/W	R/W									

RXINTCNT TDMA_RXWIN interrupt generation interval in quarter bit unit

MOD*n* Mode of Receive Interrupts

- **0** Single shot mode for the corresponding receive window
- **1** Repetitive mode for the corresponding receive window

TDMA +0188h Baseband Downlink Control Register TDMA_BDLCON

Bit	15	14	13	12	11	10	9	8	7	6	5	4	3	2	1	0
Name	ADC_ON										ADC_OFF					
Type	R/W										R/W					

ADC_ON BRXEN to BRXFS setup up time in quarter bit unit.

ADC_OFF BRXEN to BRXFS hold up time in quarter bit unit.

TDMA +018Ch Baseband Uplink Control Register 1 TDMA_BULCON1

Bit	15	14	13	12	11	10	9	8	7	6	5	4	3	2	1	0
Name	DAC_ON										DAC_OFF					
Type	R/W										R/W					

DAC_ON BTXEN to BTXFS setup up time in quarter bit unit.

DAC_OFF BTXEN to BTXFS hold up time in quarter bit unit.

TDMA +0190h Baseband Uplink Control Register 2 TDMA_BULCON2

Bit	15	14	13	12	11	10	9	8	7	6	5	4	3	2	1	0
Name									APC_HYS							
Type									R/W							

APC_HYS APCEN to BTXEN hysteresis time in quarter bit unit.

Address	Type	Width	Reset Value	Name	Description
+0000h	R	[13:0]	—	TDMA_TQCNT	Read quarter bit counter
+0004h	R/W	[13:0]	0x1387	TDMA_WRAP	Latched Qbit counter reset position
+0008h	R/W	[13:0]	0x1387	TDMA_WRAPIMD	Direct Qbit counter reset position
+000Ch	R/W	[13:0]	0x0000	TDMA_EVTVAL	Event latch position
+0010h	R/W	[13:0]	—	TDMA_DTIRQ	DSP software control
+0014h	R/W	[13:0]	—	TDMA_CTIRQ1	MCU software control 1
+0018h	R/W	[13:0]	—	TDMA_CTIRQ2	MCU software control 2
+0020h	R/W	[13:0]	—	TDMA_AFC0	The 1st AFC control
+0024h	R/W	[13:0]	—	TDMA_AFC1	The 2nd AFC control
+0028h	R/W	[13:0]	—	TDMA_AFC2	The 3rd AFC control
+002Ch	R/W	[13:0]	—	TDMA_AFC3	The 4th AFC control
+0030h	R/W	[13:0]	—	TDMA_BDLON0	Data serialization of the 1st RX block
+0034h	R/W	[13:0]	—	TDMA_BDLOFF0	
+0038h	R/W	[13:0]	—	TDMA_BDLON1	Data serialization of the 2nd RX block
+003Ch	R/W	[13:0]	—	TDMA_BDLOFF1	
+0040h	R/W	[13:0]	—	TDMA_BDLON2	Data serialization of the 3rd RX block
+0044h	R/W	[13:0]	—	TDMA_BDLOFF2	
+0048h	R/W	[13:0]	—	TDMA_BDLON3	Data serialization of the 4th RX block
+004Ch	R/W	[13:0]	—	TDMA_BDLOFF3	
+0050h	R/W	[13:0]	—	TDMA_BDLON4	Data serialization of the 5th RX block
+0054h	R/W	[13:0]	—	TDMA_BDLOFF4	
+0058h	R/W	[13:0]	—	TDMA_BDLON5	Data serialization of the 6th RX block
+005Ch	R/W	[13:0]	—	TDMA_BDLOFF5	
+0060h	R/W	[13:0]	—	TDMA_BULON0	Data serialization of the 1st TX slot
+0064h	R/W	[13:0]	—	TDMA_BULOFF0	
+0068h	R/W	[13:0]	—	TDMA_BULON1	Data serialization of the 2nd TX slot
+006Ch	R/W	[13:0]	—	TDMA_BULOFF1	
+0070h	R/W	[13:0]	—	TDMA_BULON2	Data serialization of the 3rd TX slot
+0074h	R/W	[13:0]	—	TDMA_BULOFF2	
+0078h	R/W	[13:0]	—	TDMA_BULON3	Data serialization of the 4th TX slot
+007Ch	R/W	[13:0]	—	TDMA_BULOFF3	
+0090h	R/W	[13:0]	—	TDMA_APC0	The 1st APC control

MediaTek Inc. Confidential

+0094h	R/W	[13:0]	—	TDMA_APC1	The 2nd APC control
+0098h	R/W	[13:0]	—	TDMA_APC2	The 3rd APC control
+009Ch	R/W	[13:0]	—	TDMA_APC3	The 4th APC control
+00A0h	R/W	[13:0]	—	TDMA_APC4	The 5th APC control
+00A4h	R/W	[13:0]	—	TDMA_APC5	The 6th APC control
+00A8h	R/W	[13:0]	—	TDMA_APC6	The 7th APC control
+00B0h	R/W	[13:0]	—	TDMA_BSI0	BSI event 0
+00B4h	R/W	[13:0]	—	TDMA_BSI1	BSI event 1
+00B8h	R/W	[13:0]	—	TDMA_BSI2	BSI event 2
+00BCh	R/W	[13:0]	—	TDMA_BSI3	BSI event 3
+00C0h	R/W	[13:0]	—	TDMA_BSI4	BSI event 4
+00C4h	R/W	[13:0]	—	TDMA_BSI5	BSI event 5
+00C8h	R/W	[13:0]	—	TDMA_BSI6	BSI event 6
+00CCh	R/W	[13:0]	—	TDMA_BSI7	BSI event 7
+00D0h	R/W	[13:0]	—	TDMA_BSI8	BSI event 8
+00D4h	R/W	[13:0]	—	TDMA_BSI9	BSI event 9
+00D8h	R/W	[13:0]	—	TDMA_BSI10	BSI event 10
+00DCh	R/W	[13:0]	—	TDMA_BSI11	BSI event 11
+00E0h	R/W	[13:0]	—	TDMA_BSI12	BSI event 12
+00E4h	R/W	[13:0]	—	TDMA_BSI13	BSI event 13
+00E8h	R/W	[13:0]	—	TDMA_BSI14	BSI event 14
+00ECh	R/W	[13:0]	—	TDMA_BSI15	BSI event 15
+0100h	R/W	[13:0]	—	TDMA_BPI0	BPI event 0
+0104h	R/W	[13:0]	—	TDMA_BPI1	BPI event 1
+0108h	R/W	[13:0]	—	TDMA_BPI2	BPI event 2
+010Ch	R/W	[13:0]	—	TDMA_BPI3	BPI event 3
+0110h	R/W	[13:0]	—	TDMA_BPI4	BPI event 4
+0114h	R/W	[13:0]	—	TDMA_BPI5	BPI event 5
+0118h	R/W	[13:0]	—	TDMA_BPI6	BPI event 6
+011Ch	R/W	[13:0]	—	TDMA_BPI7	BPI event 7
+0120h	R/W	[13:0]	—	TDMA_BPI8	BPI event 8
+0124h	R/W	[13:0]	—	TDMA_BPI9	BPI event 9
+0128h	R/W	[13:0]	—	TDMA_BPI10	BPI event 10
+012Ch	R/W	[13:0]	—	TDMA_BPI11	BPI event 11
+0130h	R/W	[13:0]	—	TDMA_BPI12	BPI event 12
+0134h	R/W	[13:0]	—	TDMA_BPI13	BPI event 13
+0138h	R/W	[13:0]	—	TDMA_BPI14	BPI event 14
+013Ch	R/W	[13:0]	—	TDMA_BPI15	BPI event 15
+0140h	R/W	[13:0]	—	TDMA_BPI16	BPI event 16
+0144h	R/W	[13:0]	—	TDMA_BPI17	BPI event 17
+0148h	R/W	[13:0]	—	TDMA_BPI18	BPI event 18
+014Ch	R/W	[13:0]	—	TDMA_BPI19	BPI event 19
+01A0h	R/W	[13:0]	—	TDMA_BPI20	BPI event 20
+01A4h	R/W	[13:0]	—	TDMA_BPI21	BPI event 21
+01B0h	R/W	[13:0]	—	TDMA_AUXEV0	Auxiliary ADC event 0
+01B4h	R/W	[13:0]	—	TDMA_AUXEV1	Auxiliary ADC event 1
+0150h	R/W	[15:0]	0x0000	TDMA_EVTENA0	Event Enable Control 0
+0154h	R/W	[15:0]	0x0000	TDMA_EVTENA1	Event Enable Control 1
+0158h	R/W	[15:0]	0x0000	TDMA_EVTENA2	Event Enable Control 2
+015Ch	R/W	[15:0]	0x0000	TDMA_EVTENA3	Event Enable Control 3

MediaTek Inc. Confidential

+0160h	R/W	[5:0]	0x0000	TDMA_EVTENA4	Event Enable Control 4
+0164h	R/W	[0]	0x0000	TDMA_EVTENA5	Event Enable Control 5
+0170h	R/W	[1:0]	0x0000	TDMA_WRAPOFS	TQ Counter Offset Control Register
+0174h	R/W	[13:0]	0x0000	TDMA_REGBIAS	Biasing Control Register
+0180h	R/W	[3:0]	—	TDMA_DTXCON	DTX Control Register
+0184h	R/W	[15:0]	—	TDMA_RXCON	Receive Interrupt Control Register
+0188h	R/W	[15:0]	—	TDMA_BDLCON	Downlink Control Register
+018Ch	R/W	[15:0]	—	TDMA_BULCON1	Uplink Control Register 1
+0190h	R/W	[7:0]	—	TDMA_BULCON2	Uplink Control Register 2

Table 40 TDMA Timer Register Map

10.2 Slow Clocking Unit

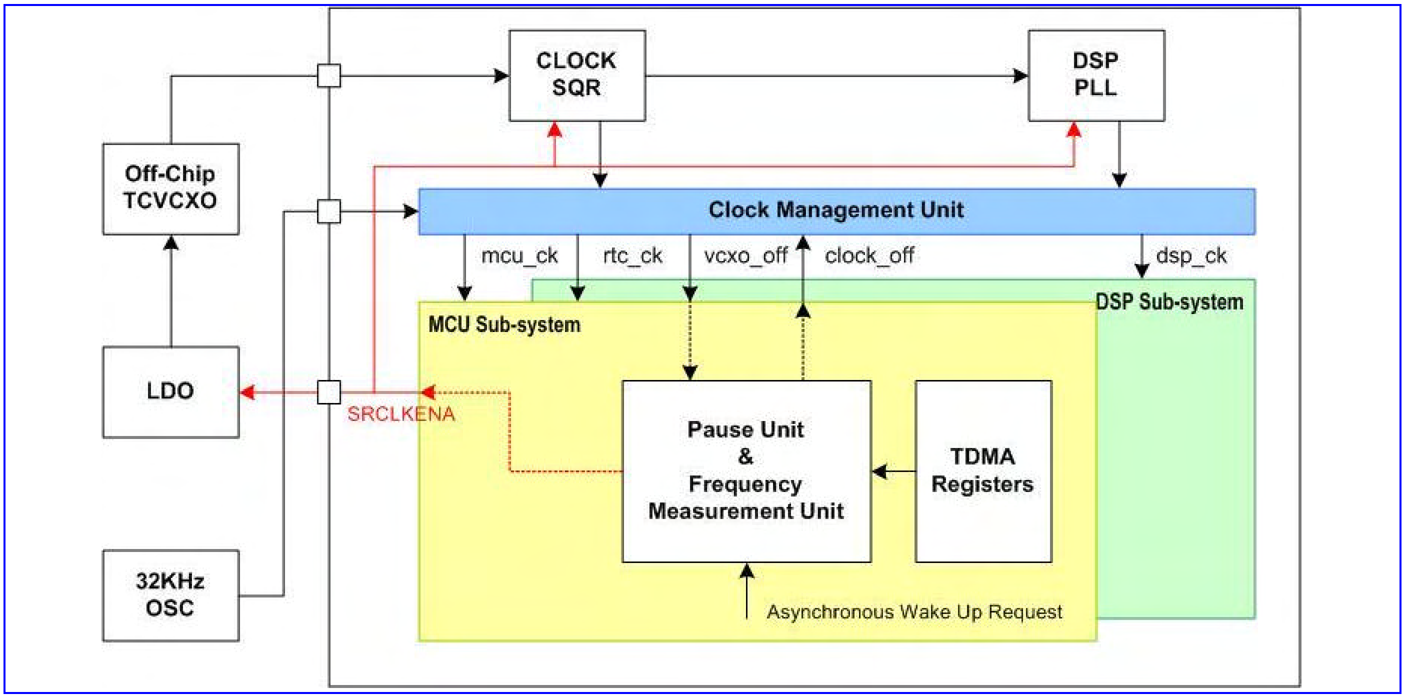

Figure 68 The block diagram of the slow clocking unit

The slow clocking unit is provided to maintain the synchronization to the base-station timing using a 32KHz crystal oscillator while the 13MHz reference clock is switched off. As shown in Figure 68, this unit is composed of frequency measurement unit, pause unit and clock management unit.

Because of the inaccuracy of the 32KHz oscillator, a frequency measurement unit is provided to calibrate the 32KHz crystal taking the accurate 13MHz source as the reference. The calibration procedure always takes place prior to the pause period.

The pause unit is used to initiate and terminate the pause mode procedure and it also works as a coarse time-base during the pause period.

The clock management unit is used to control the system clock while switching between the normal mode and the pause mode. SRCLKENA is used to turn on/off the clock squarer, DSP PLL and off-chip TCVCXO. CLOCK_OFF signal is used for gating the main MCU and DSP clock , and VCXO_OFF is used as the acknowledge signal of the CLOCK_OFF request.

10.2.1 Register Definitions

TDMA +0218h Slow clocking unit control register SM_CON

Bit	15	14	13	12	11	10	9	8	7	6	5	4	3	2	1	0
Name															PAUSE_START	FM_START
Type															W	W
Reset															0	0

FM_START Initiate the frequency measurement procedure

PAUSE_START Initiate the pause mode procedure at the next timer wrap position

TDMA +0220h Slow clocking unit status register SM_STA

Bit	15	14	13	12	11	10	9	8
Name								PAUSE_ABORT
Type								R
Bit	7	6	5	4	3	2	1	0
Name	SETTLE_CPL	PAUSE_CPL	PAUSE_INT	PAUSE_RQST			FM_CPL	FM_RQST
Type	R	R	R	R			R	R

FM_RQST Frequency measurement procedure is requested

FM_CPL Frequency measurement procedure is completed

PAUSE_RQST Pause mode procedure is requested

PAUSE_INT Asynchronous wake up from pause mode

PAUSE_CPL Pause period is completed

SETTLE_CPL Settling period is completed

PAUSE_ABORT Pause mode is aborted because of the reception of interrupt prior to entering pause mode

TDMA +022Ch Slow clocking unit configuration register SM_CNF

Bit	15	14	13	12	11	10	9	8	7	6	5	4	3	2	1	0
Name										GPT	MSDC	RTC	EINT	KP	SM	FM
Type										R/W	R/W	R/W	R/W	R/W	R/W	R/W
Reset										0	0	0	0	0	1	1

FM Enable interrupt generation upon completion of frequency measurement procedure

SM Enable interrupt generation upon completion of pause mode procedure

KP Enable asynchronous wake-up from pause mode by key press

EINT Enable asynchronous wake-up from pause mode by external interrupt

RTC Enable asynchronous wake-up from pause mode by real time clock interrupt

MSDC Enable asynchronous wake-up from pause mode by memory card insertion interrupt

Address	Type	Width	Reset Value	Name	Description
+0200h	R/W	[2:0]	—	SM_PAUSE_M	MSB of pause duration
+0204h	R/W	[15:0]	—	SM_PAUSE_L	16 LSB of pause duration
+0208h	R/W	[13:0]	—	SM_CLK_SETTLE	Off-chip VCXO settling duration
+020Ch	R	[2:0]	—	SM_FINAL_PAUSE_M	MSB of final pause count
+0210h	R	[15:0]	—	SM_FINAL_PAUSE_L	16 LSB of final pause count
+0214h	R	[13:0]	—	SM_QBIT_START	TQ_ COUNT value at the start of the pause

+0218h	W	[1:0]	0x0000	SM_CON	SM control register
+021Ch	R	[7:3,1:0]	0x0000	SM_STA	SM status register
+0220h	R/W	[15:0]	—	SM_FM_DURATION	32KHz measurement duration
+0224h	R	[9:0]	—	SM_FM_RESULT_M	10 MSB of frequency measurement result
+0228h	R	[15:0]	—	SM_FM_RESULT_L	16 LSB of frequency measurement result
+022Ch	R/W	[6:0]	0x0000	SM_CNF	SM configuration register

10.2.2 Frequency Measurement

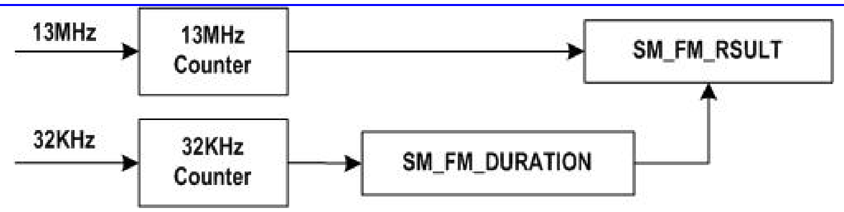

Figure 69 Block Diagram of Frequency Measurement Unit

The MCU writes into the SM_FM_DURATION register the number of clock cycles, during which the 32768 Hz clock will be measured. Then, the MCU sets the FM_START bit in the SM_CON register, the hardware sets the FM_RQST flag and resets the FM_CPL flag automatically and the 32kHz and 13MHz counters are simultaneously started from zero.

When the 32kHz counter reaches the terminal value determined by the SM_FM_DURATION register, the current value of the 13MHz counter is stored in the SM_FM_RESULT register, the counters are stopped , the FM_RQST is reset and the FM_CPL flag is set.

The SM_FM_DURATION is 16 bits wide, and the 32K counter counts $2 \times (N + 1)$ cycles of 32768Hz. This gives a maximum of almost 4.00s measurement duration.

$$Measured_frequency = \frac{2 \times (SM_FM_DURATION + 1) \times 13 \times 10^6}{SM_FM_RESULT}$$

10.2.3 Pause Mode Operation

The MCU writes the pause and settling time into the SM_PAUSE_M, SM_PAUSE_L and SM_CLK_SETTLE registers and the sum of the pause time and settling time must be as close as possible to the TDMA frame boundary, taking into account the frequency measurement result.

The MCU should set the PAUSE_START bit ahead of the TDMA_EVTVAL event. The hardware sets the PAUSE_RQST flag and resets the PAUSE_INT, PAUSE_CPL, SETTLE_CPL, PAUSE_ABORT flags automatically and the pause mode operation will be initiated at the next timer wrap position.

When the pause duration reaches the programmed terminal value or the asynchronous wake up event is received, the pause mode operation is ended/stopped/aborted and the corresponding flag is set (PAUSE_CPL, PAUSE_INT and PAUSE_ABORT). Then, the MCU calculates the timing offset and adjusts the TDMA_WRAPIMD position accordingly.

The number of quarter bit time elapsed during the pause operation is:

$$Nb_quarter_bit = Kqbit \times (SM_FINAL_PAUSE + SM_CLK_SETTLE) - \Delta qbit$$

$$\Delta qbit = TQ_WRAP - SM_QBIT_START$$

$$Kqbit = \frac{32k_period_duration}{quarter_bit_duration} = \frac{SM_FM_RESULT}{24 \times (SM_FM_DURATION + 1)}$$

11 Power, Clocks and Reset

This chapter describes about the power, clock and reset management functions provided by MT6218B. Together with Power Management IC (PMIC), MT6218B offers both fine and coarse resolutions of power control by way of software programming. With this efficient method, the developer can turn on selective resources accordingly in order to achieve optimized power consumption. The operating modes of MT6218B as well as main power states provided by PMIC are shown in **Figure** 70.

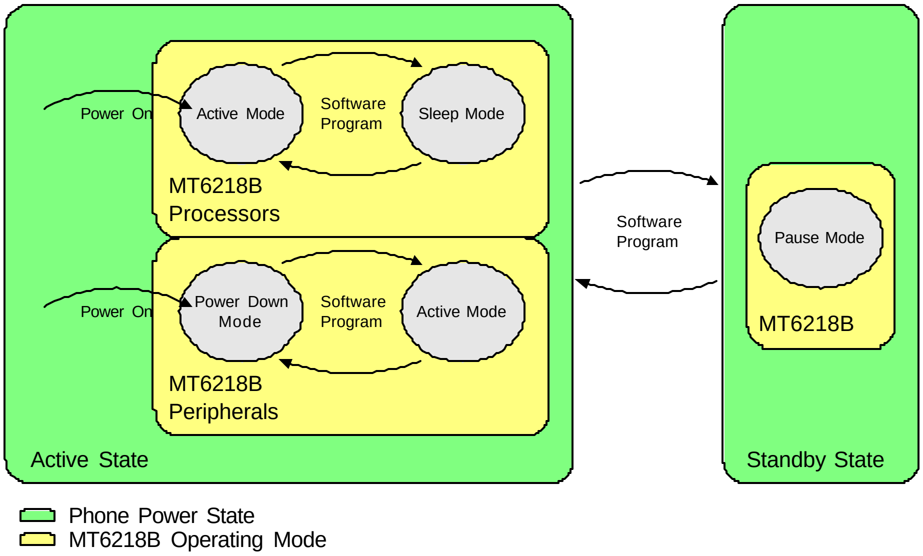

Figure 70 Major Phone Power States and Operating Modes for MT6218B based terminal

11.1 Baseband to PMIC Serial Interface

11.1.1 General Description

MT6218B use 3 wires B2PSI interface connected to PMIC, this bi-directional serial bus interface allows base-band to write command to and read from PMIC. The bus protocol utilizes a 16 bits proprietary format. B2PSICK is the serial bus clock and is driven by master. B2PSIDAT is the serial data; master or slave can drive it. B2PSICS is the bus selection signal. Once This bus us active once B2PSICS goes low, base-band start to transfer the 4 register bits followed by a read/write bit, then wait for 3 clocks for PMIC B2PSI state machine to decode the operation for succeeding 8 data bits. The stat machine should count for 16 clocks to complete the data transfer.

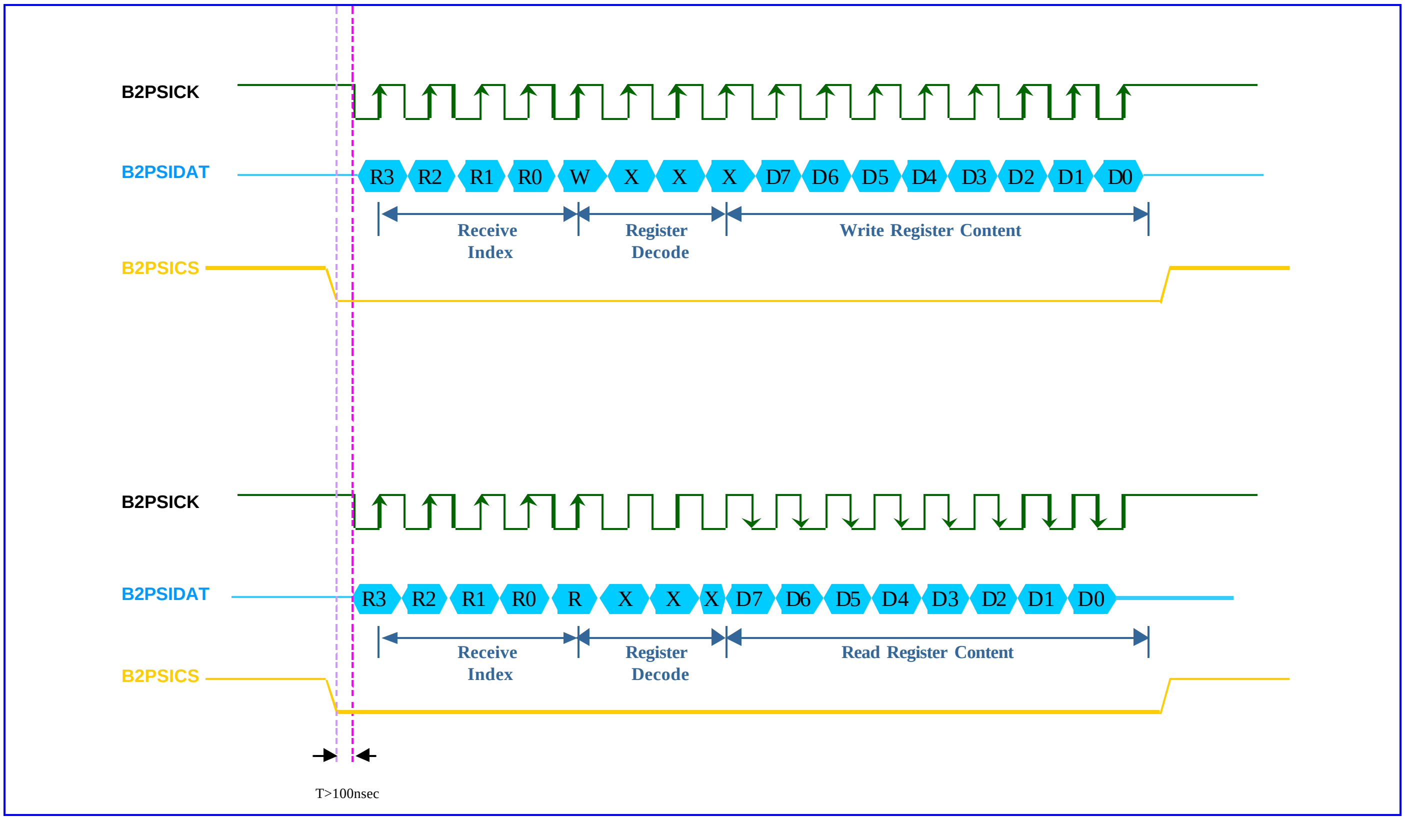

Figure 71 B2PSI bus timing

11.1.2 Register Definitions

B2PSI+0000h B2PSI data register B2PSI_DATA

Bit	15	14	13	12	11	10	9	8	7	6	5	4	3	2	1	0
Name	B2PSI_DATA [15:0]															
Type	R/W															
Reset	0															

B2PSI_DATA The B2PSI DATA format is 4 bit register + 3 bit don't care + write / read bit + 8 bit data. Write / read bit: 0 for read operation; 1 for write operation.

B2PSI +0008h B2PSI baud rate divider register B2PSI _DIV

Bit	15	14	13	12	11	10	9	8	7	6	5	4	3	2	1	0
Name	B2PSI _DIV [15:0]															
Type	R/W															
Reset	0															

B2PSI_DIV It's the B2PSI clock rate divisor. B2PSICK = system clock rate / div.

B2PSI+0010h B2PSI status register B2PSI_STAT

Bit	15	14	13	12	11	10	9	8	7	6	5	4	3	2	1	0

Name															WRITE_SUCCESS	READ_READT
Type															RC	RC
Reset															0	0

READ_READY Read data ready.

- **0** Read data isn't ready yet.
- **1** Read data is ready. It will be cleared by reading B2PSI_STAT register or B2PSI initialize a new transmit.

WRITE_SUCCESS B2PSI write successfully.

- **0** B2PSI write isn't finish yet.
- **1** B2PSI write finish. It will be cleared by reading B2PSI_STAT register or B2PSI initialize a new transmit

B2PSI+0014h B2PSI CS to CK time register B2PSI_TIME

Bit	15	14	13	12	11	10	9	8	7	6	5	4	3	2	1	0
Name														B2PSI_TIME		
Type														R/W		
Reset														0		

B2PSI_TIME The time interval that first B2PSICK will be started after the B2PSICS is active low.

Time interval = 1/system clock * B2PSI_time.

11.2 Clocks

There are two major time bases in the MT6218B. For the faster one is the 13 MHz clock originating from an off-chip temperature-compensated voltage controlled oscillator (TCVCXO) that can be either 13MHz or 26MHz. This signal is the input from the SYSCLK pad then is converted to the square-wave signal. The other time base is the 32768 Hz clock generated by an on-chip oscillator connected to an external crystal. **Figure 72** shows the clock sources as well as their utilizations inside the chip.

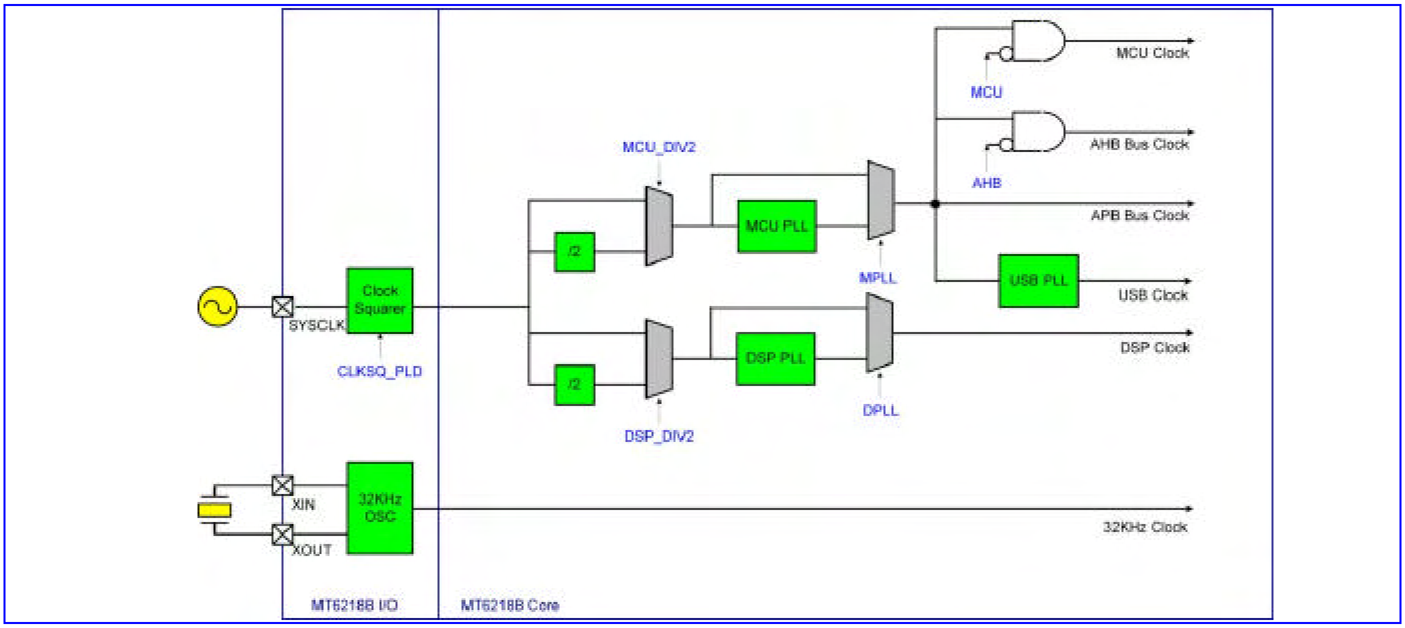

Figure 72 Clock distributions inside the MT6218B.

11.2.1 32.768 KHz Time Base

The 32768 Hz clock is always running. It' s mainly used as the time base of the Real Time Clock (RTC) module, which maintains time and date with counters. Therefore, both the 32768Hz oscillator and the RTC module is powered by separate voltage supplies that shall not be powered down when the other supplies do.

In low power mode, the 13 MHz time base is turned off, so the 32768 Hz clock shall be employed to update the critical TDMA timer and Watchdog Timer. This time base is also used to clocks the keypad scanner logic.

11.2.2 13 MHz Time Base

Two 1/2-dividers, one for MCU Clock and the other for DSP Clock, are exist to allow using 26 or 13 MHz TCVCXO.

Three phase-locked loops (MPLL, DPLL and UPLL) are used to generate three primary clocks, MCU_CLOCK, DSP_CLOCK and USB_CLOCK, and to clock modules in MCU Clock Domain and DSP Clock Domain and USB, respectively. These PLLs require no off-chip components for operations and can be turn off independently in order to save power. After power-on, all the PLLs are off by default and the source clock signal is selected through multiplexers. The software shall take cares of the PLL lock time while changing the clock selections. The PLLs and their usages are listed below.

DPLL supplies the DSP system clock, *DSP_CLOCK*. DPLL can be programmed to provide 1X to 6X output of the 13 MHz reference. The MCU software may set the clock multiplier according to the DSP performance required. Currently, the multiply factor is set to 6X in this version of chip.

MPLL supplies the MCU system clock, *MCU_CLOCK*, which paces the operations of the MCU cores, MCU memory system, and MCU peripherals as well. MPLL has a programmable clock multiplier, which supports 2X and 4X clock multiplication. The MCU software may change the multiplier setting according to different workload conditions. Currently, the multiply factor will be set to 4X in this version of chip.

UPLL supplies the USB clock, USB_CLOCK. The UPLL input is a 4 MHz clock, which comes from 52 MHz clock generated by MPLL and then divided by 13. UPLL pumps the input clock source 12 times to generate 48 MHz for USB module.

Note that PLLs need some time to become stable after being powered up. The software shall take cares of the PLL lock time before switching them to the proper frequency. Usually, a software loop longer than the PLL lock time is employed to deal with the problem.

For power management, the MCU software program may stop MCU Clock by setting the Sleep Control Register. Any interrupt requests to MCU can pause the sleep mode, and thus MCU return to the running mode.

AHB also can be stop by setting the Sleep Control Register. However the behavior of AHB in sleep mode is a little different from that of MCU. After entering Sleep Mode, it can be temporarily waked up by any “hreq” (bus request), and then goes back to sleep automatically after all “hreqs” de-assert. Any transactions can take place as usual in sleep mode, and it can save power while there is no transaction on it. However the penalty is losing a little system efficiency for switching on and off bus clock, but the impact is small.

11.2.3 Register Definitions

CONFG+0100h MPLL Frequency Register MPLL

Bit	15	14	13	12	11	10	9	8	7	6	5	4	3	2	1	0

Bit	15	14	13	12	11	10	9	8	7	6	5	4	3	2	1	0
Name				CALI					RST						SPD	
Type				R/W					R/W						R/W	
Reset				0					0						0	

SPD Select the Output Clock Rate for MPLL

- **00** power down
- **01** 13MHz x 2
- **10** Not used
- **11** 13MHz x 4

RST Reset Control of MPLL

- **0** Normal Operation
- **1** Reset the MPLL

CALI Calibration Control for MPLL

CONFG+104h DPLL Frequency register DPLL

Bit	15	14	13	12	11	10	9	8	7	6	5	4	3	2	1	0
Name				CALI					RST					SPD		
Type				R/W					R/W					R/W		
Reset				0					0					0		

SPD Select the Output Clock Rate for DPLL

- **000** power down
- **001** 13MHz x 2
- **010** 13MHz x 3
- **011** 13MHz x 4
- **100** 13MHz x 5
- **101** 13MHz x 6

RST Reset Control of DPLL

- **0** Normal Operation
- **1** Reset the DPLL

CALI Calibration Control for DPLL

CONFG+110h DPLL Frequency register UPLL

Bit	15	14	13	12	11	10	9	8	7	6	5	4	3	2	1	0
Name				CALI					RST							
Type				R/W					R/W							
Reset				0					0							

RST Reset Control of DPLL

- **0** Normal Operation
- **1** Reset the UPLL

CALI Calibration Control for UPLL

CONFG+108h Clock Control Register CLK_CON

Bit	15	14	13	12	11	10	9	8	7	6	5	4	3	2	1	0
Name									UPLL_TMA	MPLL_TMA	DPLL_TMA	CLKSQ_PLD	MCU_DIV2	DPLL	MPLL	DSP_DIV2
Type									R/W	R/W	R/W	R/W	R/W	R/W	R/W	R/W

Reset									0	0	0	0	0	0	0	0

DSP_DIV2 Control the x2 clock divider for DPLL input

- **0** Divider bypassed
- **1** Divider not bypassed

MPLL Select MCU Clock

- **0** MPLL bypassed
- **1** Using MPLL Clock

DPLL Select DSP Clock

- **0** DPLL bypassed
- **1** Using DPLL Clock

MCU_DIV2 Control the x2 clock divider for MCU clock domain

- **0** Divider bypassed
- **1** Divider not bypassed

CLKSQ_PLD Pull Down Control

- **0** Disable
- **1** Enables

DPLL_TMA DPLL test mode

- **0** Disable
- **1** Enables

MPLL_TMA MPLL test mode

- **0** Disable
- **1** Enable

UPLL_TMA UPLL test mode

- **0** Disable
- **1** Enable

CONFG+10Ch Sleep Control Register SLEEP_CON

Bit	15	14	13	12	11	10	9	8	7	6	5	4	3	2	1	0
Name														DSP	AHB	MCU
Type														WO	WO	WO
Reset														0	0	0

MCU Stop the MCU Clock to force MCU Processor entering sleep mode. MCU clock will be resumed as long as there comes an interrupt request or system is reset.

- **0** MCU Clock is running
- **1** MCU Clock is stopped

AHB Stop the AHB Bus Clock to force the entire bus entering sleep mode. AHB clock will be resumed as long as there comes an interrupt request or system is reset.

- **0** AHB Bus Clock is running
- **1** AHB Bus Clock is stopped

DSP Stop the DSP Clock.

- **0** DSP Bus Clock is running
- **1** DSP Bus Clock is stopped

11.3 Reset Management

Figure 73 shows reset scheme used in MT6218B. There are three kinds of resets in the MT6218B, i.e., hardware reset, watchdog reset, and software resets.

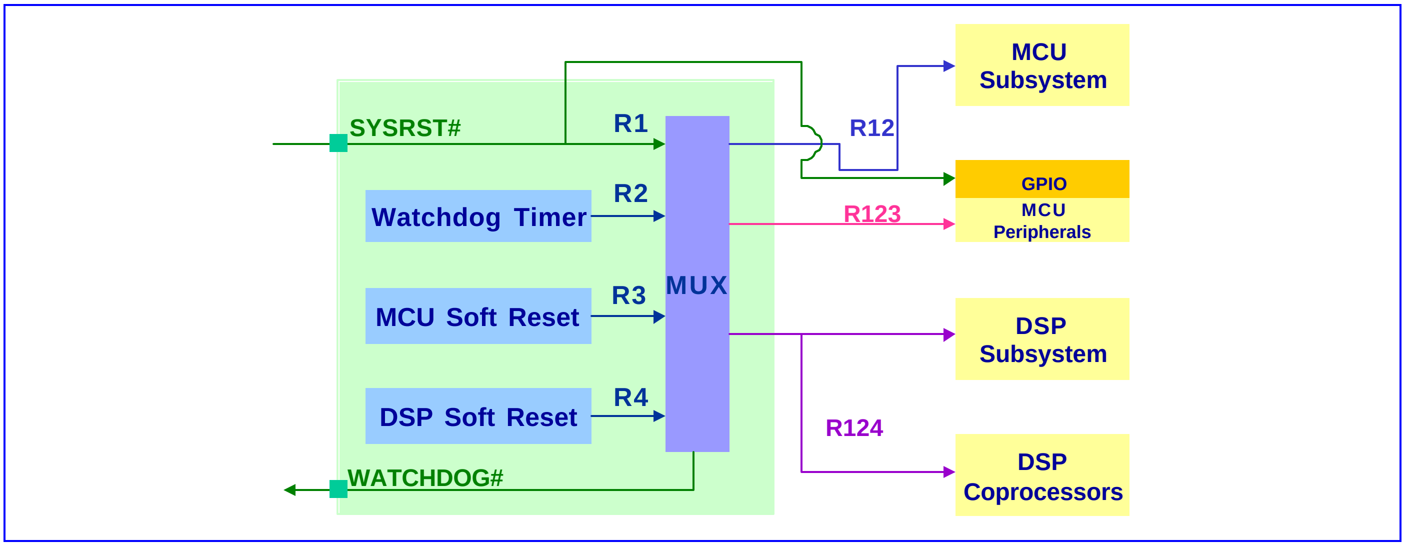

Figure 73 Reset Scheme Used in MT6218B

11.3.1 General Description

11.3.1.1 Hardware Reset

This reset is input through the SYSRST# pin, which shall be driven to low during power-on. The hardware reset has a global effect on the chip: it initializes all digital and analog circuits except the Real Time Clock module. The initial states of the MT6218B sub-blocks are listed below.

- All analog circuits are turned off.
- All PLLs are turned off and bypassed. The 13MHz system clock is the default time base.
- Special Trap States in GPIO

11.3.1.2 Watchdog Reset

A watchdog reset is generated when the Watchdog Timer expires as the MCU software failed to re-program the timer counter in time. This situation is typically induced by abnormal software execution, which can be aborted by a hardwired watchdog reset. Hardware blocks that are affected by the watchdog reset are

- MCU subsystem
- DSP subsystem
- External Components (by software program)

11.3.1.3 Software Resets

These are local reset signals that initialize specific hardware. The MCU or DSP software may write to software reset trigger registers to return hardware modules to their initial states, when hardware failures are detected, for example.

MediaTek Inc. Confidential

The following modules have software resets.

- MCU Peripherals
- DSP Core
- DSP Coprocessors

11.3.2 Register Definitions

RGU +0000h Watchdog Timer Control register WDT_MODE

Bit	15	14	13	12	11	10	9	8	7	6	5	4	3	2	1	0
Name	KEY[7:0]											AUTO-RESTART	IRQ	EXTEN	EXTPOL	ENABLE
Type												R/W	R/W	R/W	R/W	R/W
Reset												0	0	0	0	1

ENABLE

- **0** Disable Watchdog Timer
- **1** Enable Watchdog Timer

EXTPOL Define the polarity of the external watchdog pin

- **0** Active low
- **1** Active high

EXTEN

- **0** The watchdog can not generate an external watchdog reset signal
- **1** If the watchdog counter reaches zero, an external watchdog signal is generated

KEY Write access is allowed if KEY=0x22

IRQ issue interrupt instead of WDT reset. For debug purpose, RGU issues an interrupt to MCU instead of resetting system.

- **0** Disable
- **1** Enable

AUTO-RESTART Re-start watch dog timer counter with the value of WDT_LENGTH while task ID is written into Software Debug Unit.

- **0** Disable. Counter re-starts by writing KEY into WDT_RESTART register.
- **1** Enable. Counter re-starts by writing KEY into WDT_RESTART register or by writing task ID into software debug unit.

RGU +0004h Watchdog Time-Out Interval register WDT_LENGTH

Bit	15	14	13	12	11	10	9	8	7	6	5	4	3	2	1	0
Name	TIMOUT[10:0]											KEY[7:0]				
Type	WO															
Reset	111_1111_1111b															

KEY Write access is allowed if KEY=08h

TIMOUT The counter is restarted with {TIMEOUT [10:0], 1_1111_1111b}. So the Watchdog Timer time-out period is a multiple of 512*T_{32k}=15.6ms

RGU +0008h Watchdog Timer Restart register WDT_RESTART

Bit	15	14	13	12	11	10	9	8	7	6	5	4	3	2	1	0
Name	KEY[15:0]															
Type																
Reset																

KEY Restart the counter if KEY=1971h

RGU +000Ch Watchdog Timer Status register WDT_STA

Bit	15	14	13	12	11	10	9	8	7	6	5	4	3	2	1	0
Name	WDT	SW_WDT														
Type	RO	RO														
Reset	0	0														

WDT

0 Reset not due to Watchdog Timer

1 Reset due to that Watchdog Timer time-out period is reached

SW_WDT

0 Reset not due to Software-triggered Watchdog Timer

1 Reset due to Software-triggered Watchdog Timer

NOTE: The system reset does not affect this register. This bit is cleared when the bit ENABLE of WTU_MODE register is written.

RGU +0010h CPU Peripheral Software Reset Register SW_PERIPH_RSTN

Bit	15	14	13	12	11	10	9	8	7	6	5	4	3	2	1	0
Name	RESET	DAMRST	USBRST		LCDRST											
Type	R/W	R/W	R/W		R/W											
Reset	0	0	0		0											

RESET Controls the APB Peripherals Reset Control

0: No Reset

1: Reset Activated

DMARST Reset the DMA peripheral

0: No Reset

1: Reset Activated

USBRST Reset USB

0 No Reset

1 Reset Activated

LCDRST Reset LCD

0 No Reset

1 Reset Activated

RGU +0014h DSP Software Reset Register SW_DSP_RSTN

Bit	15	14	13	12	11	10	9	8	7	6	5	4	3	2	1	0
Name	RST															

Type	R/W															
Reset	0															

RST Controls the DSP System Reset Control

0: No reset

1: Reset activate

RGU +0018h Watchdog Timer Reset Signal Duration register WDT_RSTINTREVAL

Bit	15	14	13	12	11	10	9	8	7	6	5	4	3	2	1	0
Name					LENGTH[11:0]											
Type					R/W											
Reset					FFFh											

LENGTH This register indicates the reset duration when watchdog timer timeout. However, if bit IRQ in WDT_MODE register is set to "1", an interrupt will issue instead of a reset.

RGU+001Ch Watchdog Timer Software Reset Register WDT_SWRST

Bit	15	14	13	12	11	10	9	8	7	6	5	4	3	2	1	0
Name	KEY[15:0]															
Type																
Reset																

Software -triggered watch dog timer reset. If the register content matches the KEY, a watch dog reset is issued. However, if bit IRQ in WDT_MODE register is set to "1", an interrupt will issue instead of a reset.

KEY 1209h

11.4 Software Power Down Control

In addition to have Pause Mode at Standby State, the software program can also put each peripherals independently in Power Down Mode at Active State by gating their clock off. The typical logic implemented is described as **Figure 74**. For all these configuration bits, 1 means that the function is Power Down Mode and 0 means that it is in the Active Mode.

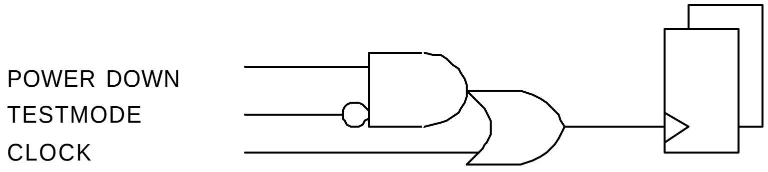

Figure 74 Power Down Control at Block Level

11.4.1 Register Definitions

CONFG+300h Power Down Control 0 Register PDN_CON0

Bit	15	14	13	12	11	10	9	8	7	6	5	4	3	2	1	0
Name	DSP_DIV2	MPLL	DPLL	MCU_DIV2	CLKSQ	UPLL					RESZ	JPEG	WAVETABLE	GCU	USB	DMA

Type	R/W	R/W	R/W	R/W	R/W	R/W					R/W	R/W	R/W	R/W	R/W	R/W
Reset	1	1	1	1	0	1					1	1	1	1	1	1

DMA Controls the DMA Controller Power Down

USB Controls the USB Controller Power Down

GCU Controls the GCU Controller Power Down

WAVETALBE Controls the DSP WaveTable DMA Power Down

JPEG Controls the JPEG Decoder Power Down

RESZ Controls the Image Resizer Power Down

CLKSQ Controls the Clock squarer Power Down

MCU_DIV2 Controls the MUC DIV2 Power Down

DPLL Controls the DPLL Power Down

MPLL Controls the MPLL Power Down

DSP_DIV2 Controls the DSP DIV2 Power Down

CONFG +304h Power Down Control 1 Register PDN_CON1

Bit	15	14	13	12	11	10	9	8	7	6	5	4	3	2	1	0
Name			SPI	NFI	TRC	PWM2	MSDC	UART2	LCD	ALTER	PWM	SIM	UART1	GPIO	KP	GPT
Type			R/W	R/W	R/W	R/W	R/W	R/W	R/W	R/W	R/W	R/W	R/W	R/W	R/W	R/W
Reset			1	1	1	1	1	1	1	1	1	1	0	1	1	1

GPT Controls the General Purpose Timer Power Down

KP Controls the Keypad Scanner Power Down

GPIO Controls the GPIO Power Down

UART1 Controls the UART1 Controller Power Down

SIM Controls the SIM Controller Power Down

PWM Controls the PWM Generator Power Down

ALTER Controls the Alerter Generator Power Down

LCD Controls the Serial LCD Controller Power Down

UART2 Controls the UART2 Controller Power Down

MSDC Controls the MS/SD Controller Power Down

PWM2 Controls the PWM2 Generator Power Down

TRC Controls the MCU Tracer Power Down

NFI Controls the NAND FLASH Interface Power Down

SPI Controls the Serial Port Interface Power Down

CONFG +308h Power Down Control 2 Register PDN_CON2

Bit	15	14	13	12	11	10	9	8	7	6	5	4	3	2	1	0
Name	GMSK	BBRX		AAFE	DIV	GCC	BFE	VAFE	AUXAD	FCS	APC	AFC	BPI	BSI	RTC	TDMA
Type	R/W	R/W		R/W	R/W	R/W	R/W	R/W	R/W	R/W	R/W	R/W	R/W	R/W	R/W	R/W
Reset	1	1		1	1	1	1	1	1	1	1	1	1	1	1	1

TDMA Controls the TDMA Power Down

RTC Controls the RTC Power Down

BSI Controls the BSIPower Down. This control will not be updated until both tdma_evtval and qbit_en are asserted.

BPI Controls the BPI Power Down. This control will not be updated until both tdma_evtval and qbit_en are asserted.

AFC Controls the AFC Power Down. This control will not be updated until both tdma_evtval and qbit_en are asserted.

APC Controls the APC Power Down. This control will not be updated until both tdma_evtval and qbit_en are asserted.

FCS Controls the FCS Power Down

AUXAD Controls the AUX ADC Power Down

VAFE Controls the Audio Front End of VBI Power Down

BFE Controls the Base-Band Front End Power Down

GCU Controls the GCU Power Down

DIV Controls the Divider Power Down

AAFE Controls the Audio Front End of MP3 Power Down

BBRX Controls the BB RX Power Down

GMSK Controls the GMSK Power Down

CONFG +30Ch Power Down Control 3 Register PDN_CON3

Bit	15	14	13	12	11	10	9	8	7	6	5	4	3	2	1	0
Name																ICE
Type																R/W
Reset																1

ICE Enables the debug feature of the ARM7TDMI core. It controls the DBGEN pin of the ICEBreaker.

CONFG+0310h Power Down Set 0 Register PDN_SET0

Bit	15	14	13	12	11	10	9	8	7	6	5	4	3	2	1	0
Name	DSP_DIV2	MPLL	DPLL	MCU_DIV2	CLKSQ	UPLL					RESZ	JPEG	WAVETABLE	GCU	USB	DMA
Type	W1S	W1S	W1S	W1S	W1S	W1S	W1S	W1S	W1S	W1S	W1S	W1S	W1S	W1S	W1S	W1S

CONFG+0314h Power Down Set 1 Register PDN_SET1

Bit	15	14	13	12	11	10	9	8	7	6	5	4	3	2	1	0
Name			SPI	NFI	TRC	PWM2	MSDC	UART2	LCD	ALTER	PWM	SIM	UART1	GPIO	KP	GPT
Type	W1S	W1S	W1S	W1S	W1S	W1S	W1S	W1S	W1S	W1S	W1S	W1S	W1S	W1S	W1S	W1S

CONFG+0318h Power Down Set 2 Register PDN_SET2

Bit	15	14	13	12	11	10	9	8	7	6	5	4	3	2	1	0
Name	GMSK	BBRX		AAFE	DIV	GCC	BFE	VAFE	AUXAD	FCS	APC	AFC	BPI	BSI	RTC	TDMA
Type	W1S	W1S	W1S	W1S	W1S	W1S	W1S	W1S	W1S	W1S	W1S	W1S	W1S	W1S	W1S	W1S

CONFG+031Ch Power Down Set 3 Register PDN_SET3

Bit	15	14	13	12	11	10	9	8	7	6	5	4	3	2	1	0
Name																ICE
Type	W1S	W1S	W1S	W1S	W1S	W1S	W1S	W1S	W1S	W1S	W1S	W1S	W1S	W1S	W1S	W1S

These registers are used to individually set power down control bit. Only the bits set to 1 are in effect, and these power down control bits will set to 1. Else the other bits keep original value.

EACH BIT Set the Associated Power Down Control Bit to 1.

0 no effect
1 Set corresponding bit to 1

CONFG+0320h Power Down Clear 0 Register PDN_CLR0

Bit	15	14	13	12	11	10	9	8	7	6	5	4	3	2	1	0
Name	DSP_DIV2	MPLL	DPLL	MCU_DIV2	CLKSQ	UPLL					RESZ	JPEG	WAVETABLE	GCU	USB	DMA
Type	W1C	W1C	W1C	W1C	W1C	W1C	W1C	W1C	W1C	W1C	W1C	W1C	W1C	W1C	W1C	W1C

CONFG+0324h Power Down Clear 1 Register PDN_CLR1

Bit	15	14	13	12	11	10	9	8	7	6	5	4	3	2	1	0
Name			SPI	NFI	TRC	PWM2	MSDC	UART2	LCD	ALTER	PWM1	SIM	UART1	GPIO	KP	GPT
Type	W1C	W1C	W1C	W1C	W1C	W1C	W1C	W1C	W1C	W1C	W1C	W1C	W1C	W1C	W1C	W1C

CONFG+0328h Power Down Clear 2 Register PDN_CLR2

Bit	15	14	13	12	11	10	9	8	7	6	5	4	3	2	1	0
Name	GMSK	BBRX		AAFE	DIV	GCC	BFE	VAFE	AUXAD	FCS	APC	AFC	BPI	BSI	RTC	TDMA
Type	W1C	W1C	W1C	W1C	W1C	W1C	W1C	W1C	W1C	W1C	W1C	W1C	W1C	W1C	W1C	W1C

CONFG+032Ch Power Down Clear 3 Register PDN_CLR3

Bit	15	14	13	12	11	10	9	8	7	6	5	4	3	2	1	0
Name																ICE
Type	W1C	W1C	W1C	W1C	W1C	W1C	W1C	W1C	W1C	W1C	W1C	W1C	W1C	W1C	W1C	W1C

These registers are used to individually Clear power down control bit. Only the bits set to 1 are in effect, and these power down control bits will set to 0. Else the other bits keep original value.

EACH BIT Clear the Associated Power Down Control Bit.
0 no effect
1 Set corresponding bit to 0

12 Analog Front-end Interface

12.1 General Description

To communicate with analog front-end, a common control interface for all analog blocks is implemented. In addition, there are some dedicated interfaces for data transfer. The common control interface translate APB bus write and read cycle for specific addresses related to analog front-end control. Writing or reading any of these control registers, there is a latency to transfer data to or from analog front-end. While dedicated data interface of each analog block is implemented in the corresponding digital block.

12.2 Register Definitions

MIXED+0000h Analog Front-end Driving Strength Control Register AC_ODS_CON

Bit	15	14	13	12	11	10	9	8	7	6	5	4	3	2	1	0
Name													AUX	ERX	VTX	CCI
Type													R/W	R/W	R/W	R/W
Reset													0	0	0	0

Set this register for timing critical round trip path

AUX AUX ADC output pins

ERX EDGE RX output pins

VTX VBI TX output pins

CCI Common Control Interfaces output pins

12.2.1.1 Voice Front-end

MCU APB bus registers for speech are listed as followings.

MIXED+0100h AFE Voice Analog Gain Control Register AFE_VAG_CON

Bit	15	14	13	12	11	10	9	8	7	6	5	4	3	2	1	0
Name				VUPG					VDPG0				VDPG1			
Type				R/W					R/W				R/W			
Reset				0000					0000				0000			

Set this register for analog PGA gains. VUPG is set for microphone input volume control. And VDPG0 and VDPG1 are set for two output volume controls

VUPG voice-band up-link PGA gain control bits

VDPG0 voice-band down-link PGA0 gain control bits

VDPG1 voice-band down-link PGA1 gain control bits

MIXED+0104h AFE Voice Analog-Circuit Control Register 0 AFE_VAC_CON0

Bit	15	14	13	12	11	10	9	8	7	6	5	4	3	2	1	0
Name						VCFG				VDSEND		VCALI				
Type						R/W				R/W		R/W				
Reset						0000				00		00000				

Set this register for analog circuit configuration controls. Please refer to analog functional specification for details.

VCFG input interface configuration control

VDSEND single-ended configuration control for out1 and out0

VCALI biasing current control

MIXED+0108h AFE Voice Analog-Circuit Control Register 1 AFE_VAC_CON1

Bit	15	14	13	12	11	10	9	8	7	6	5	4	3	2	1	0
Name				VBG_CTRL			VPDN_CHPUMP	VFLOAT	VRSDON	VRESSW	VBUF0SEL	VBUF1SEL			VADCINMODE	VDACINMODE
Type				R/W			R/W	R/W	R/W	R/W	R/W	R/W			R/W	R/W
Reset				000			0	0	0	0	0	000			0	0

Set this register for analog circuit configuration controls. There are several loop back modes and test modes implemented for test purposes. Please refer to analog functional specification for details. Suggested value is 0084h.

VBG_CTRL voice-band band-gap control

VPDN_CHPUMP voice-band charge pump power down

0: power down (normal operating mode)

1: charge pump on (for fab. process)

VFLOAT voice-band output driver float

0: normal operating mode

1: float mode

VRSDON voice-band redundant signed digit function on

0: 1-bit 2-level mode

1: 2-bit 3-level mode

VRESSW voice-band output buffer 1 output DC voltage control.

VBUF0SEL voice buffer 0 input selection (reserved.)

VBUF1SEL voice buffer 1 input selection

001: voice DAC output

010: external FM radio input

100: audio DAC output

OTHERS: reserved.

VADCINMODE Voice-band ADC output mode.

0: normal operating mode

1: the ADC input from the DAC output

VDACINMODE Voice-band DAC input mode.

0: normal operating mode

1: the DAC input from the ADC output

MIXED+010Ch AFE Voice Analog Power Down Control Register AFE_VAPDN_CON

Bit	15	14	13	12	11	10	9	8	7	6	5	4	3	2	1	0

Name											VPDN_BIAS	VPDN_LNA	VPDN_ADC	VPDN_DAC	VPDN_OUT1	VPDN_OUT0
Type											R/W	R/W	R/W	R/W	R/W	R/W
Reset											0	0	0	0	0	0

Set this register to power up analog blocks. 0: power down, 1: power up.

VPDN_BIAS bias block
VPDN_LNAlow noise amplifier block
VPDN_ADC ADC block
VPDN_DAC DAC block
VPDN_OUT1 OUT1 buffer block
VPDN_OUT0 OUT0 buffer block

MIXED+0110h AFE Voice AGC Control Register **AFE_VAGC_CON**

Bit	15	14	13	12	11	10	9	8	7	6	5	4	3	2	1	0
Name			AGCTEST	RELNOIDURSEL		RELNOILEVSEL		FRELCKSEL		SRELCKSEL		ATTTHDCAL		ATTCKSEL	HYSTEREN	AGCEN
Type			R/W	R/W		R/W		R/W		R/W		R/W		R/W	R/W	R/W
Reset			0	00		00		00		00		00		0	0	0

Set this register for analog circuit configuration controls. There are several loop back modes and test modes implemented for test purposes. Please refer to analog functional specification for details. Suggested value is 0dcfh.

AGCEN AGC function enable

HYSTEREN AGC hysteresis function enable

ATTCKSEL attack clock selection

- **0**: 16 KHz
- **1**: 32 KHz

ATTTHDCAL attack threshold calibration
SRELCKSEL release slow clock selection

- **00**: 1000/512 Hz
- **01**: 1000/256 Hz
- **10**: 1000/128 Hz
- **11**: 1000/64 Hz

FRELCKSEL release fast clock selection

- **00**: 1000/64 Hz
- **01**: 1000/32 Hz
- **10**: 1000/16 Hz
- **11**: 1000/8 Hz

RELNOILEVSEL release noise level selection

- **00**: -8 dB
- **01**: -14 dB
- **10**: -20 dB
- **11**: -26 dB

RELNOIDURSEL release noise duration selection

00: 64 ms

01: 32 ms

10: 16 ms

11: 8 ms, 32768/4096

12.2.1.2 Audio Front-end

MCU APB bus registers for audio are listed as followings.

MIXED+0200h AFE Audio Analog Gain Control Register AFE_AAG_CON

Bit	15	14	13	12	11	10	9	8	7	6	5	4	3	2	1	0
Name							AMUTER	AMUTEL	APGR				APGL			
Type							R/W	R/W	R/W				R/W			
Reset							0	0	0000				0000			

Set this register for analog PGA gains.

AMUTER audio PGA L-channel mute control

AMUTEL audio PGA R-channel mute control

APGR audio PGA R-channel gain control

APGL audio PGA L-channel gain control

MIXED+0204h AFE Audio Analog-Circuit Control Register AFE_AAC_CON

Bit	15	14	13	12	11	10	9	8	7	6	5	4	3	2	1	0
Name					ARCON	ABUFSELR			ABUFSELL			ACALI				
Type					R/W	R/W			R/W			R/W				
Reset					0	000			000			00000				

Set this register for analog circuit configuration controls. Please refer to analog functional specification for details. Suggested value is 0120h.

ARCON audio external RC control

ABUFSELR audio buffer R-channel input selection

001: audio DAC output

010: voice DAC output

100: external FM radio input

OTHERS: reserved.

ABUFSELL audio buffer L-channel input selection

001: audio DAC output

010: voice DAC output

100: external FM radio input

OTHERS: reserved.

ACALI audio bias current control

MIXED+0208h AFE Audio Analog Power Down Control Register AFE_AAPDN_CON

Bit	15	14	13	12	11	10	9	8	7	6	5	4	3	2	1	0
Name						ACNR						APDN_BIAS	APDN_DACR	APDN_DACL	APDN_OUTR	APDN_OUTL
Type						R/W						R/W	R/W	R/W	R/W	R/W
Reset						000000						0	0	0	0	0

Set this register to power up analog blocks. 0: power down, 1: power up.

ACNR audio click noise reduction

APDN_BIAS BIAS block

APDN_DACR DAC block

APDN_DACL DAC block

APDN_OUTR OUT buffer block

APDN_OUTL OUT buffer block

12.2.1.3 BB RX

MCU APB bus registers for BBRX ADC are listed as followings.

MIXED+0300h BBRX ADC Analog-Circuit Control Register BBRX_AC_CON

Bit	15	14	13	12	11	10	9	8	7	6	5	4	3	2	1	0
Name					QSEL		ISEL		RSV	PDNCHP	GAIN	CALBIAS				
Type					R/W		R/W		R/W	R/W	R/W	R/W				
Reset					00		00		0	0	0	00000				

Set this register for analog circuit configuration controls.

CALBIAS The register field is for control of biasing current in BBRX mixed-signal module. It is coded in 2's complement. That is, its maximum is 15 and minimum is –16. Biasing current in BBRX mixed-signal module has impact on performance of A/D conversion. Larger is the value of the register field, larger is the biasing current in BBRX mixed-signal module. It implies higher SNR.

GAIN The register bit is for configuration of gain control of analog inputs in GSM RX mixed-signal module. When the bit is set to 1, gain control for analog inputs will be turn on and thus GSM RX mixed-signal module can provide higher resolution. When the bit is set to 0, gain control for analog inputs will be turn off and thus GSM RX mixed-signal module only can provide lower resolution.

- **0** Gain control for analog inputs in GSM RX mixed-signal module will be turn off.
- **1** Gain control for analog inputs in GSM RX mixed-signal module will be turn on.

PDNCHP Power down control for charge pumping of GSM RX ADC.

- **0** Not power down charge pumping of GSM RX ADC.
- **1** Power down charge pumping of GSM RX ADC.

ISEL Loopback configuration selection for I-channel in BBRX mixed-signal module

- **00** Normal mode
- **01** Loopback TX analog I
- **10** Loopback TX analog Q

11 Select the grounded input

QSEL Loopback configuration selection for Q-channel in BBRX mixed-signal module

00 Normal mode

01 Loopback TX analog Q

10 Loopback TX analog I

11 Select the grounded input

12.2.1.4 BB TX

MCU APB bus registers for BBTX DAC are listed as followings.

MIXED+0400h BBTX DAC Analog-Circuit Control Register 0 — BBTX_AC_CON0

Bit	15	14	13	12	11	10	9	8	7	6	5	4	3	2	1	0
Name	CALRCDONE	STARTCALRC	GAIN			CALRCSEL			TRIMI				TRIMQ			
Type	R	R/W	R/W			R/W			R/W				R/W			
Reset	0	0	000			000			0000				0000			

Set this register for analog circuit configuration controls. The procedure to make calibration processing for smoothing filter in BBTX mixed-signal module is as follows:

7. Write 1 to the register bit CARLC in the register TX_CON of Baseband Front End in order to activate clock required for calibration process. Initiate calibration process.
8. Write 1 to the register bit STARTCALRC. Start calibration process.
9. Read the register bit CALRCDONE. If read as 1, then calibration process finished. Otherwise repeat the step.
10. Write 0 to the register bit STARTCALRC. Stop calibration process.
11. Write 0 to the register bit CARLC in the register TX_CON of Baseband Front End in order to deactivate clock required for calibration process. Terminate calibration process.
12. The result of calibration process can be read from the register field CALRCOUT of the register BBTX_AC_CON1. Software can set the value to the register field CALRCSEL for 3-dB cutoff frequency selection of smoothing filter in DAC of BBTX.

Remember to set the register field CALRCCONT of the register BBTX_AC_CON1 to 0xb before calibration process. It only needs to be set once.

TRIMQ The register field is used to control gain trimming of Q-channel DAC in BBTX mixed-signal module. It is coded in 2's complement, that is, with maximum 15 and minimum –16.

TRIMI The register field is used to control gain trimming of I-channel DAC in BBTX mixed-signal module. It is coded in 2's complement, that is, with maximum 15 and minimum –16.

CALRCSEL The register field is for selection of cutoff frequency of smoothing filter in BBTX mixed-signal module. It is coded in 2's complement. That is, its maximum is 3 and minimum is –4.

GAIN The register field is used to control gain of DAC in BBTX mixed-signal module. It has impact on both of I- and Q-channel DAC in BBTX mixed-signal module. It is coded in 2's complement, that is, with maximum 3 and minimum –4.

STARTCALRC Whenever 1 is writing to the bit, calibration processing for smoothing filter in BBTX mixed-signal module will be triggered. Once the calibration process is completed, the register bit CARLDONE will be read as 1.

CALRCDONE The register bit indicates if calibration processing for smoothing filter in BBTX mixed-signal module finishes. When calibration processing finishes, the register bit will be 1. Until the register bit STARTCALRC is set to 0, the register bit becomes 0 again.

MIXED+0404h BBTX DAC Analog-Circuit Control Register 1 BBTX_AC_CON1

Bit	15	14	13	12	11	10	9	8	7	6	5	4	3	2	1	0
Name	CALRCOUT			FLOAT	CALRCCNT				CALBIAS					CMV		
Type	R			R/W	R/W				R/W					R/W		
Reset	-			0	0000				00000					000		

Set this register for analog circuit configuration controls.

CMV The register field is used to control common voltage in BBTX mixed-signal module. It is coded in 2's complement, that is, with maximum 3 and minimum –4.

CALBIAS The register field is for control of biasing current in BBTX mixed-signal module. It is coded in 2's complement. That is, its maximum is 15 and minimum is –16. Biasing current in BBTX mixed-signal module has impact on performance of D/A conversion. Larger is the value of the register field, larger is the biasing current in BBTX mixed-signal module.

CALRCCNT Parameter for calibration processing of smoothing filter in BBTX mixed-signal module. Default value is eleven. Note that it is **NOT** coded in 2's complement. Therefore the range of its value is from 0 to 15. Remember to set it to 0xb before BBTX calibration process. It only needs to be set once.

FLOAT The register field is used to have the outputs of DAC in BBTX mixed-signal module float or not.

CALRCOUT After calibration processing for smoothing filter in BBTX mixed-signal module, a set of 3-bit value is obtained. It is coded in 2's complement.

12.2.1.5 AFC DAC

MCU APB bus registers for AFC DAC are listed as followings.

MIXED+0500h AFC DAC Analog-Circuit Control Register AFC_AC_CON

Bit	15	14	13	12	11	10	9	8	7	6	5	4	3	2	1	0
Name									TEST		PDN_CHPUMP	CALI				
Type									R/W		R/W	R/W				
Reset									0		0	0				

Set this register for analog circuit configuration controls. Please refer to analog functional specification for details.

TEST test control

PDN_CHPUMP charge pump power down

CALI biasing current control

12.2.1.6 APC DAC

MCU APB bus registers for APC DAC are listed as followings.

MIXED+0600h APC DAC Analog-Circuit Control Register APC_AC_CON

Bit	15	14	13	12	11	10	9	8	7	6	5	4	3	2	1	0
Name											BYP	CALI				
Type											R/W	R/W				
Reset											0	0				

Set this register for analog circuit configuration controls. Please refer to analog functional specification for details.

BYP bypass output buffer

CALI biasing current control

12.2.1.7 Auxiliary ADC

MCU APB bus registers for AUX ADC are listed as followings.

MIXED+0700h Auxiliary ADC Analog-Circuit Control Register AUX_AC_CON

Bit	15	14	13	12	11	10	9	8	7	6	5	4	3	2	1	0
Name												CALI				
Type												R/W				
Reset												0				

Set this register for analog circuit configuration controls. Please refer to analog functional specification for details.

CALI biasing current control

MediaTek Inc. Confidential